TABLE OF CONTENTS

STANDARD DRAWINGS

Roadway Detail Drawings (Series 100)

Drawing Number

Standard Highback Curb & Gutter Detail (HB30-7) 100
Modified Concrete Curb & Gutter (RU-30) 101
Driveway Curb (Type HB30-7) Details 110
Driveway Apron Details 111
Standard Sidewalk Details 120
Handicap Ramp (Meet All ADA Requirements) Details 121
Standard Concrete Joint Details 122
10’ Trail Section 130
Standard Road Cross-sections With Curb, Gutter and Sidewalk 140
Standard Road Cross-sections With Ditches 141
Standard 6’ Cross Gutter 151
Driveway Access Details Without Curbing 152
Class I Standard Monument Details 160
Class II Monument 161
Trench Backfill and Repair Detail 170
Manholes & Valve Boxes Concrete Collar 171
Water Valve Collar Engravings 172
Sewer Manhole Collar Engravings 173
Irrigation Valve Collar Engravings 174

Drainage & Sewer Detail Drawings (Series 200)

Standard Catch Basin Box & Frame 200
Standard Catch Basin Grate (Bicycle Safe) 202
39” Solid Lid Details 203
Sidewalk Drainage Structure (Page 1) 204A
Sidewalk Drainage Structure (Page 2) 204B
Curb Inlet Double Catch Basin Box (Page 1) 205A
Curb Inlet Double Catch Basin Frame (Page 2) 205B
Curb Inlet Single Catch Basin Box (Page 1) 206A
Curb Inlet Single Catch Basin Frame (Page 2) 206B
Temporary On-site Drainage Retention Berm for Graded Subdivision Lots 207
Standard Manhole Details 220
Junction & Drop Manhole Details 221
Manhole Frame & Cover Details 222
Manhole Step Details 223
Sewer Cleanout Cover Details 224
Typical Residential Sewer Connection Details 230

P.V.C. Service Connection into Existing P.V.C. Sewer Mains 231
P.V.C. Service Connection into New P.V.C. Sewer Mains 232

Water Detail Drawings (Series 300)

Water Meter Box Details 300
Water Meter Box Location Details 301
Standard Fire Hydrant Details 302
8” or 6” Water Lateral (Connection to Existing Line) 304
Typical Water Service Connection & Meter 305
Water Line Thrust Block Details 306
Standard Tee PVC Restraining System Detail 307
Standard Bends for PVC Restraining System Detail 308
Standard Tee Ductile Iron Restraining System Detail 309
Standard Bends for Ductile Iron Restraining System Detail 310
Standard Dead-end for Ductile Iron Restraining System Detail 311
In Line Valve/Dead –End on PVC Pipe Detail 312
Standard Pressure Reducing Valve & Vault for New Construction (Page 1) 315A
Standard Pressure Reducing Valve Vault Lid (Page 2) 315B
Standard Air-Vac Detail 316
Remote Air-Vac Detail 317
2” Fire Line Detail 318
Fire Line Valve Box 319
Concrete Encasement Detail 330

Signage Detail Drawings (Series 400)

Standard Street Sign 400
Private Street Signs 401
Sign Designation Form 402
Sign, Post, and Installation Details 410
Sign Post & Mounting Details 411
Typical Sign Placement Details 412

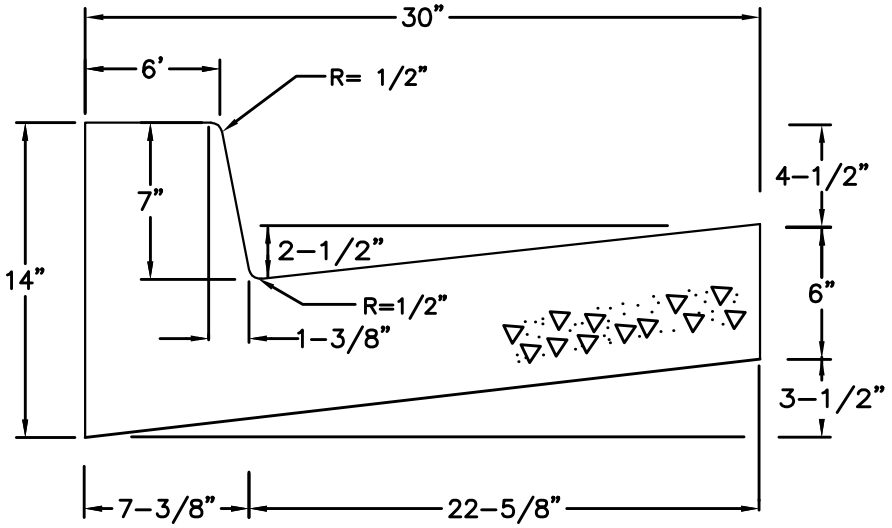

STANDARD CURB & GUTTER
(TYPE HB30-7)

NOTES:
1. ALL CONCRETE SHALL BE CLASS "A".

WASHINGTON COUNTY PUBLIC WORKS DEPARTMENT					
REVISIONS			STANDARD HIGHBACK CURB & GUTTER DETAIL	STANDARD DWG. NO.	
DATE	DESCRIPTION	BY		100	1 OF 1
				APPROVED:	
				DATE: MAY 2009	BY: TE

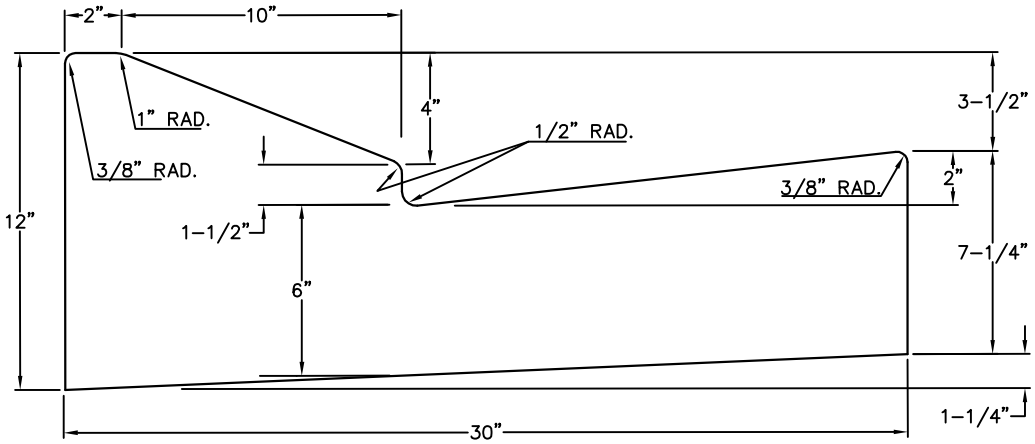

RU30

NOTES:
1- ALL CONSTRUCTION & MATERIALS SHALL CONFORM TO COUNTY STANDARDS.

WASHINGTON COUNTY PUBLIC WORKS DEPARTMENT

REVISIONS				
DATE	DESCRIPTION	BY	MODIFIED CONCRETE CURB & GUTTER (RU30)	STANDARD DWG. NO. 101 — 1 OF 1
				APPROVED:
				DATE: MAY 2009 — BY: TE

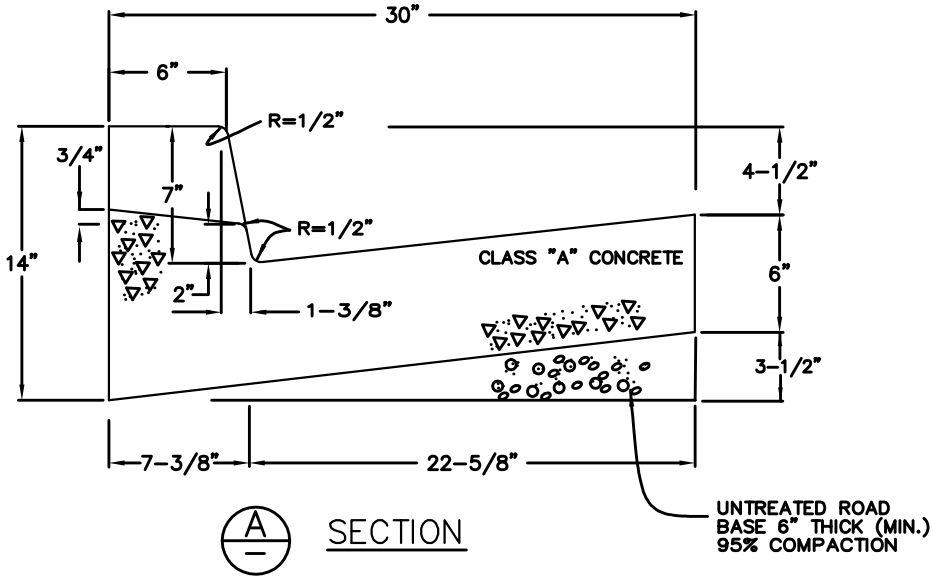

A SECTION

NOTES:
1- DISTANCE SHOWN IS FOR HB30-7 CURB ONLY.

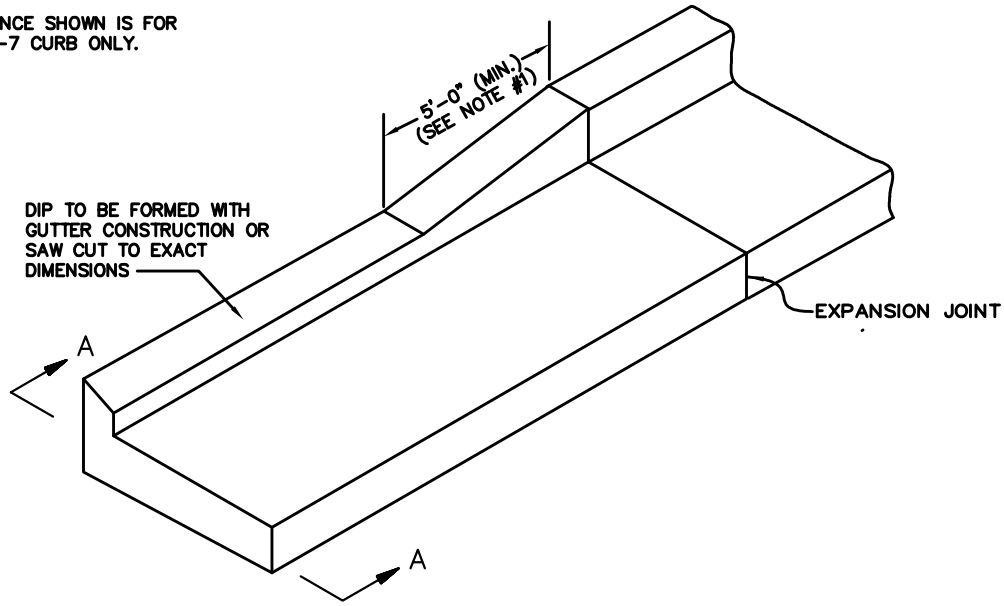

PERSPECTIVE VIEW

NO SCALE

WASHINGTON COUNTY PUBLIC WORKS DEPARTMENT

REVISIONS				
DATE	DESCRIPTION	BY	DRIVEWAY CURB (TYPE HB30-7) DETAILS	STANDARD DWG. NO. 110 — 1 OF 1
				APPROVED:
				DATE: MAY 2009 — BY: TE

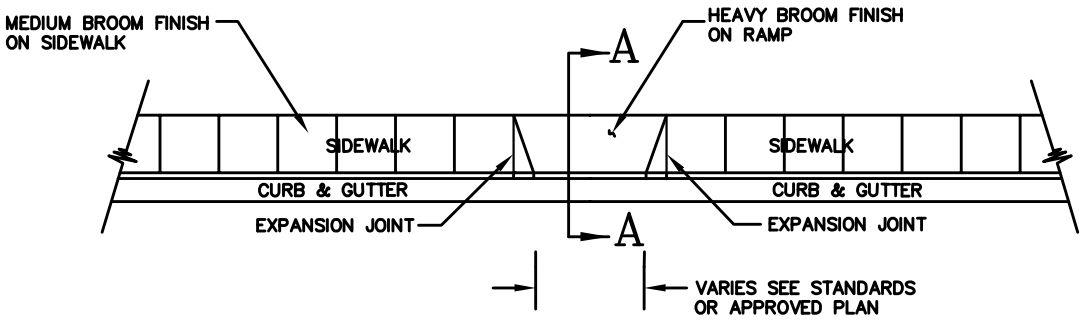

PLAN

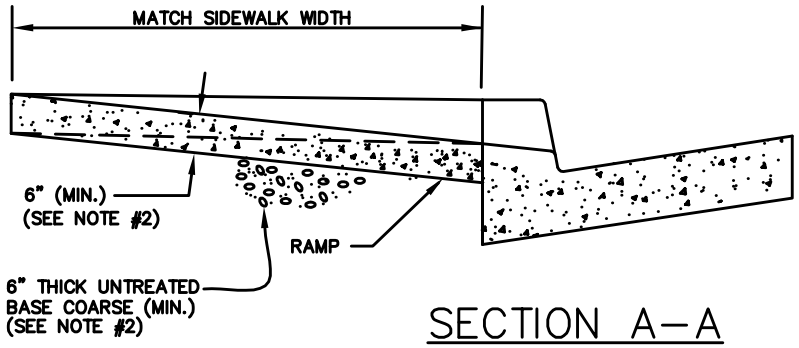

SECTION A–A

NOTES:

1– WIDTH OF DRIVEWAYS VARIES WITH USE– SEE COUNTY STANDARDS OR CONTACT PUBLIC WORKS DEPARTMENT.

2– DRIVEWAYS WITH COMMERCIAL OR INDUSTRIAL USE REQUIRE ADDITIONAL THICKNESS. SEE PUBLIC WORKS DEPARTMENT.

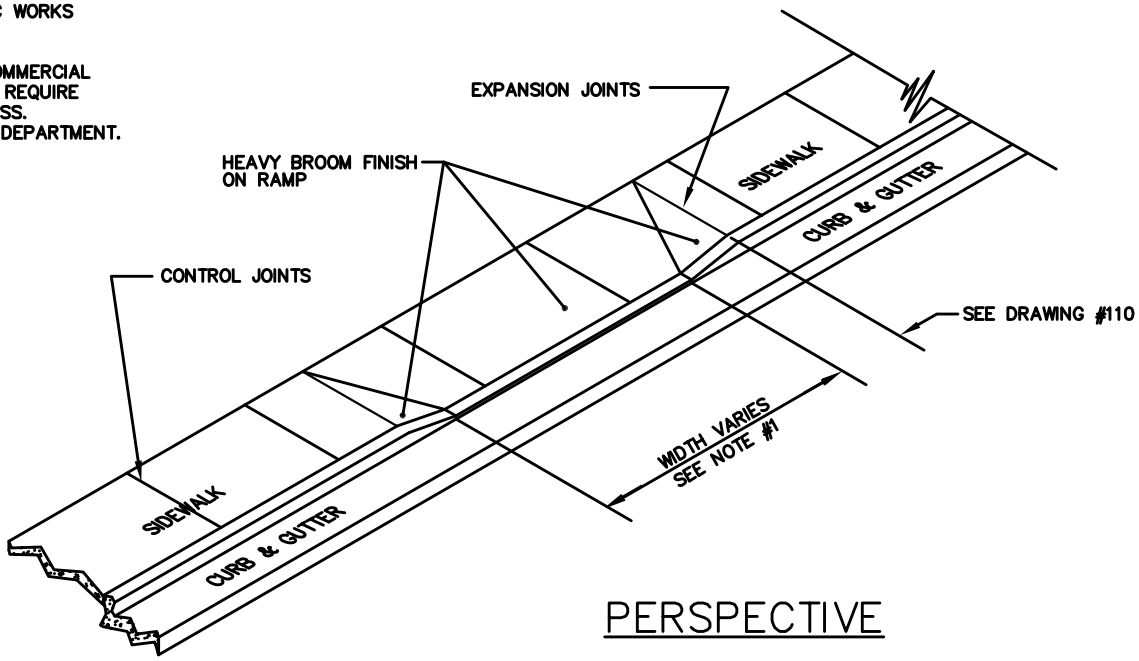

PERSPECTIVE

WASHINGTON COUNTY PUBLIC WORKS DEPARTMENT

REVISIONS				
DATE	DESCRIPTION	BY	DRIVEWAY APRON DETAILS	STANDARD DWG. NO. 111 — 1 OF 1
				APPROVED:
				DATE: MAY 2009 — BY: TE

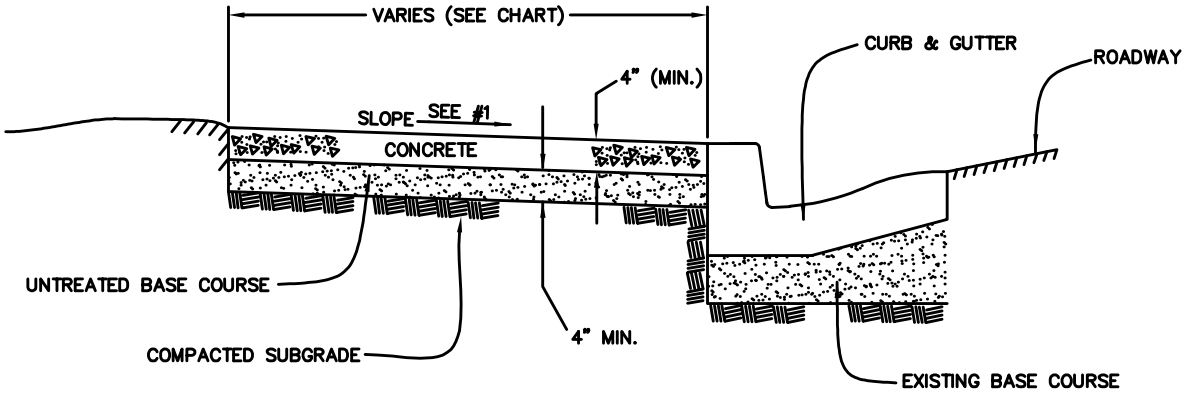

GENERAL NOTES

1– CROSS SLOPE SHALL BE 2% FROM TOP OF CURB

2– UNTREATED BASE COURSE SHALL BE PLACED UNDER SIDEWALK AND COMPACTED TO A MIN. OF 95%. THICKNESS OF UNTREATED BASE NOT LESS THAN 4 INCHES.

3– USE CLASS "A" CONCRETE ONLY (6 BAG, TYPE V CEMENT).

4– SIDEWALK SURFACE TO HAVE A MEDIUM BROOM FINISH.

5– WHERE SIDEWALKS CROSS DRIVEWAYS, MINIMUM THICKNESS SHALL BE AS FOLLOWS:
RESIDENTIAL: 6" FOR SIDEWALK, 6" FOR ROADBASE
COMMERCIAL/INDUSTRIAL: 8" FOR SIDEWALK, 8" FOR ROADBASE.

6– FIBER EXPANSION JOINTS SHALL BE PLACED AT BOTH ENDS OF DRIVEWAY

7– FIBER EXPANSION JOINTS SHALL ALSO BE PLACED BETWEEN DRIVEWAY AND BACK OF SIDEWALK.

SIDEWALK	ROAD TYPE		
	LOCAL	COLLECTOR	ARTERIAL
WIDTH	4'	5'	5'+
SCORE JOINT SPACING	4'	5'	5'+
EXPANSION JOINT SPACING	20'	20'	20'

WASHINGTON COUNTY PUBLIC WORKS DEPARTMENT

REVISIONS				
DATE	DESCRIPTION	BY	STANDARD SIDEWALK DETAILS	STANDARD DWG. NO. 120 — 1 OF 1
				APPROVED:
				DATE: MAY 2009 BY: TE

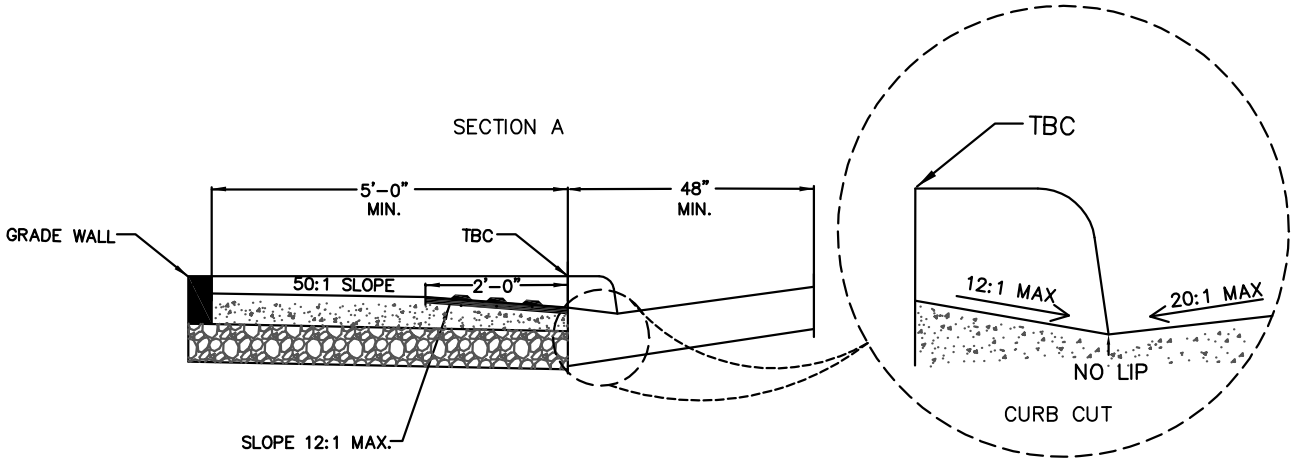

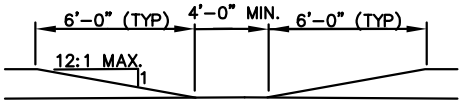

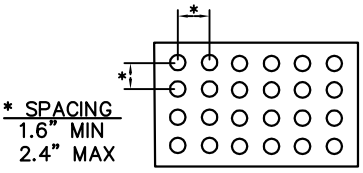

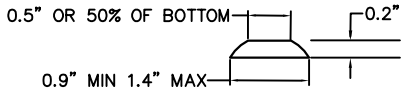

RAISED TRUNCATED DOMES
FIGURE #3

NOTES:

1– POUR CURB & GUTTER SEPARATELY FROM RAMP SIDEWALK.
2– RAMPS SHALL BE LOCATED AT MIDPOINT OF CURB RETURN UNLESS OTHERWISE APPROVED.
3– MAXIMUM RAMP SLOPE IS 12:1.
4– RAMPS SHALL HAVE A ROUGH BROOM FINISH TRANSVERSE TO SLOPE OF THE RAMP.
5– RAMP SHOWN IS FOR HB30–7 CURB & GUTTER ONLY– ADJUST OTHERS AS NECESSARY TO MEET MAXIMUM ALLOWABLE SLOPE.
6– LOCATE DETECTABLE WARNINGS SO THAT THE EDGE NEAREST THE CURB LINE OR OTHER POTENTIAL HAZARD IS TOUCHING THE CURB LINE OR OTHER POTENTIAL HAZARD. PROVIDE 2–FOOT MINIMUM WIDTH AND LENGTH EQUAL TO THE WIDTH OF THE RAMP. SEE FIGURE #3 FOR TRUNCATED DOME SIZE AND SPACING DIMENSION DETAILS.
7– PROVIDE DETECTABLE WARNING EDGE LINE TO ALIGN WITH PED RAMP. DETECTABLE WARNING PANEL MAY NEED TO BE CUT. GRIND EDGE OF ANY CUT TRUNCATED TO 45°.
8– LANDINGS MUST BE A MINIMUM OF 36" WITH A 50:1 MAX.
9– FOR RAMPS WITH NO LANDING, FLARES MUST BE 12:1 MAX.
10– CURB CUT MUST BE 12:1 MAX.
11– ALL RAMPS MUST COMPLY WITH THE ADA ACT.

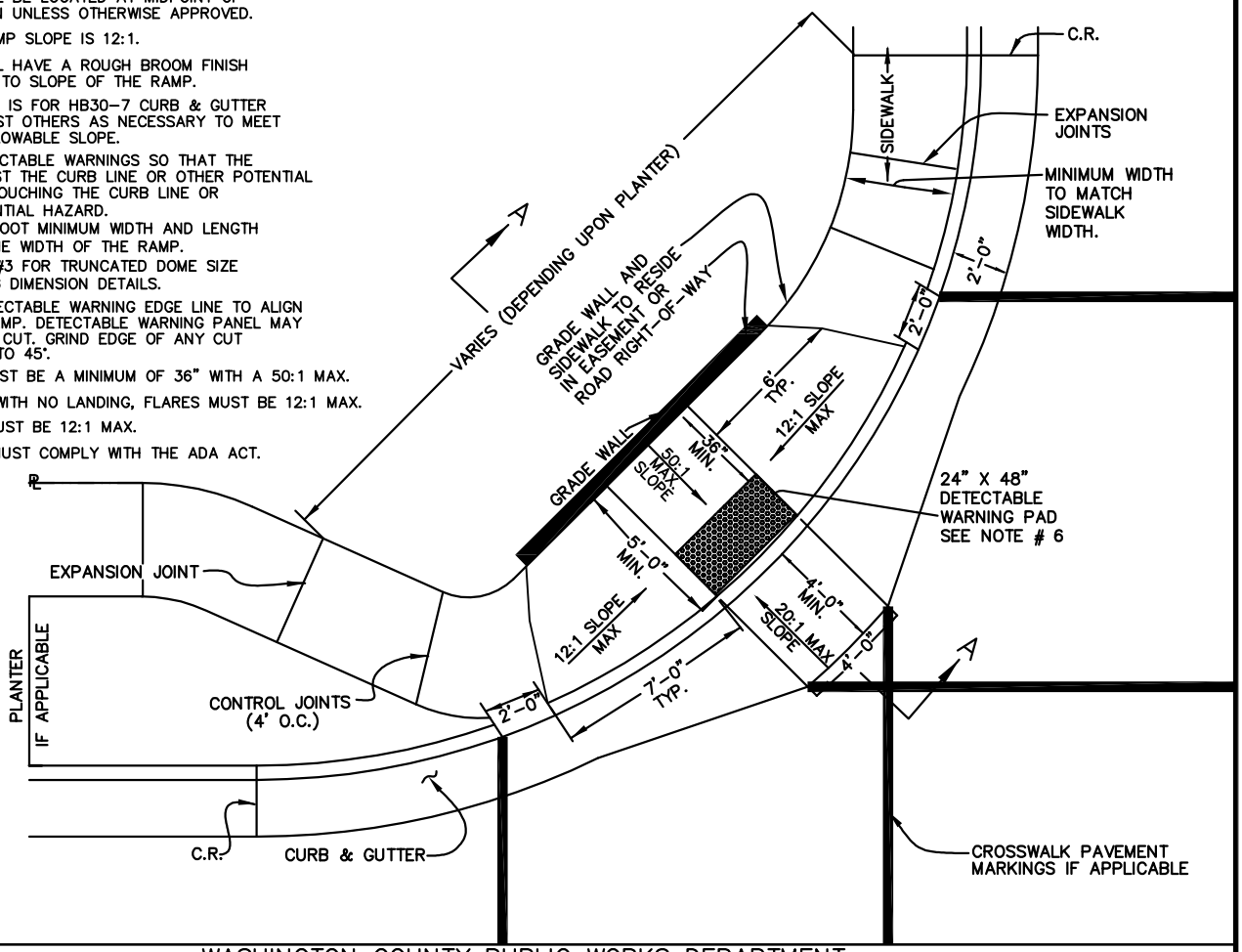

WASHINGTON COUNTY PUBLIC WORKS DEPARTMENT

REVISIONS		
DATE	DESCRIPTION	BY

HANDICAP RAMP (MEET ALL ADA REQUIREMENTS)
DETAILS

STANDARD DWG. NO.	
121	1 OF 1
APPROVED:	
DATE: MAY 2009	BY: TE

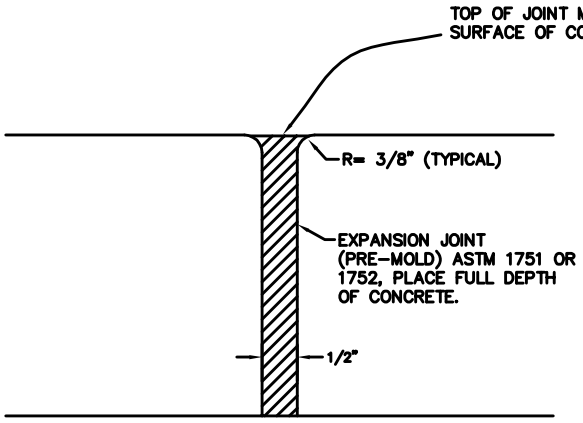

EXPANSION JOINT

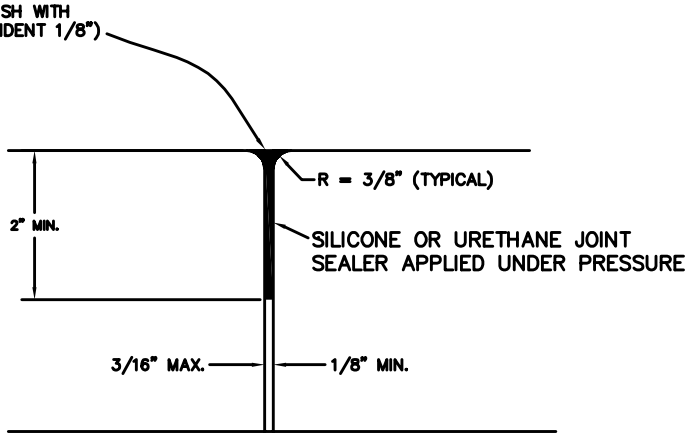

FORM PLATE JOINT

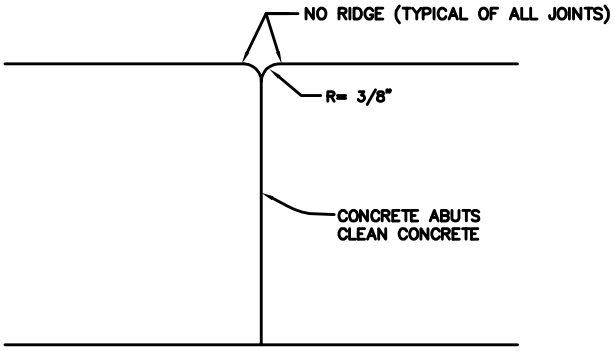

COLD JOINT

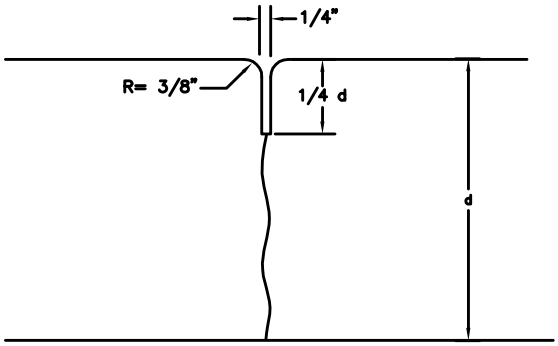

CONTROL JOINT

WASHINGTON COUNTY PUBLIC WORKS DEPARTMENT

REVISIONS				
DATE	DESCRIPTION	BY	STANDARD CONCRETE JOINT DETAILS	STANDARD DWG. NO. 122 — 1 OF 1
				APPROVED:
				DATE: MAY 2009 — BY: TE

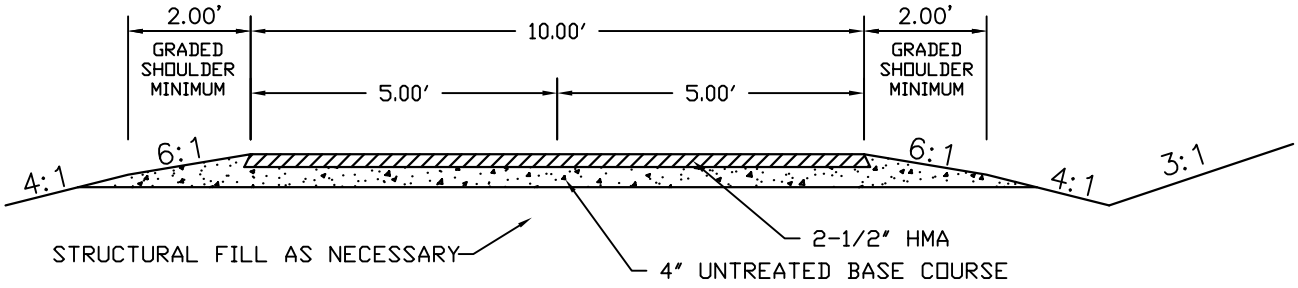

TYPICAL SECTION

NOTE: TRAIL TO MEET AMERICAN ASSOCIATION OF STATE HIGHWAY AND TRANSPORTATION OFFICIALS (AASHTO) "GUIDE FOR DEVELOPMENT OF BICYCLE FACILITIES" DESIGN STANDARDS.

WASHINGTON COUNTY PUBLIC WORKS DEPARTMENT					
REVISIONS			10' TRAIL SECTION	STANDARD DWG. NO.	
DATE	DESCRIPTION	BY		130	1 OF 1
				APPROVED:	
				DATE: MAY 2009	BY: TE

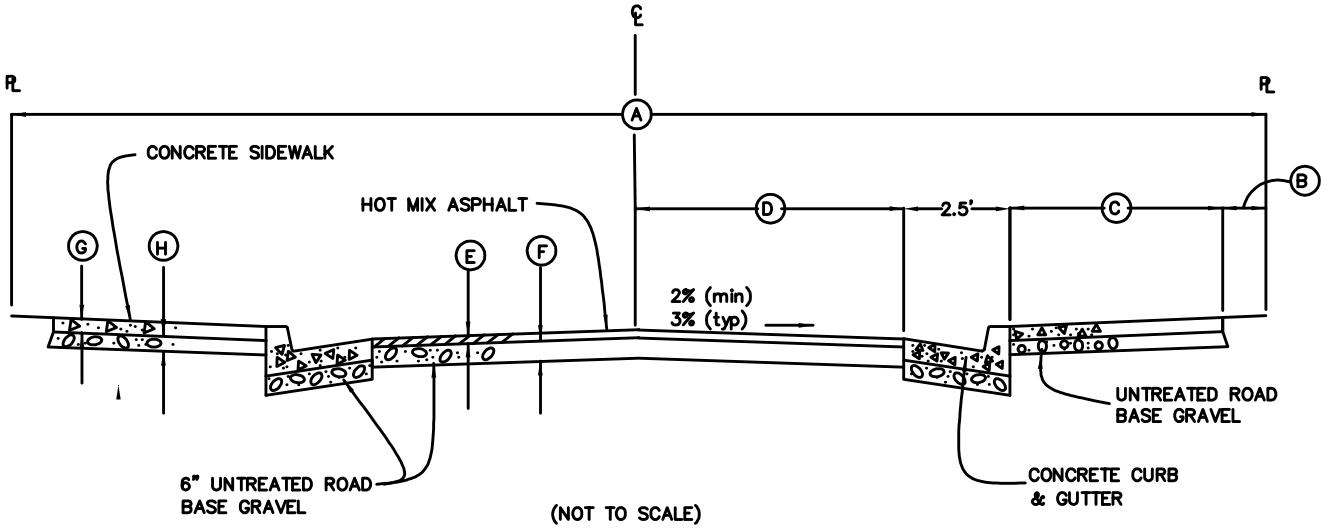

DIMENSIONS				
MARK	LOCAL	MINOR COLLECTOR	MAJOR COLLECTOR	ARTERIAL
A	50'	60'	66'	80'+
B	1'	1'	1'	1'
C	4'	5'	5'	5'+
D	17.5'	21.5'	24.5'	31.5' (min)
E(MIN)	3"	3"	3"	4"
F	SEE STANDARD SPECIFICATIONS			
G	4" FOR SIDEWALK, 6" FOR DRIVEWAY APRONS			
H	4" UNDER SIDEWALKS, 6" UNDER DRIVEWAYS			

NOTES:

1– MAXIMUM ALLOWABLE DIFFERENCE IN CURB ELEVATION SHALL BE 12 INCHES AND MUST HAVE COUNTY REPRESENTATIVE APPROVAL PRIOR TO ITS USE.

2– FOR ROADS IN OR SERVING INDUSTRIAL AREAS, ASPHALT AND BASE THICKNESS SHALL BE INCREASED ACCORDING TO PROVISIONS FOR HEAVY TRUCK TRAFFIC.

3– MINIMUM ASPHALT THICKNESS IS SHOWN. THICKNESS SHALL BE BASED UPON ACTUAL ENGINEERING ANALYSIS, BUT IN NO CASE SHALL IT BE LESS THAN THE MINIMUM.

WASHINGTON COUNTY PUBLIC WORKS DEPARTMENT

REVISIONS				
DATE	DESCRIPTION	BY	STANDARD ROAD CROSS SECTIONS WITH CURB, GUTTER AND SIDEWALK	STANDARD DWG. NO. 140 — 1 OF 1
				APPROVED:
				DATE: MAY 2009 — BY: TE

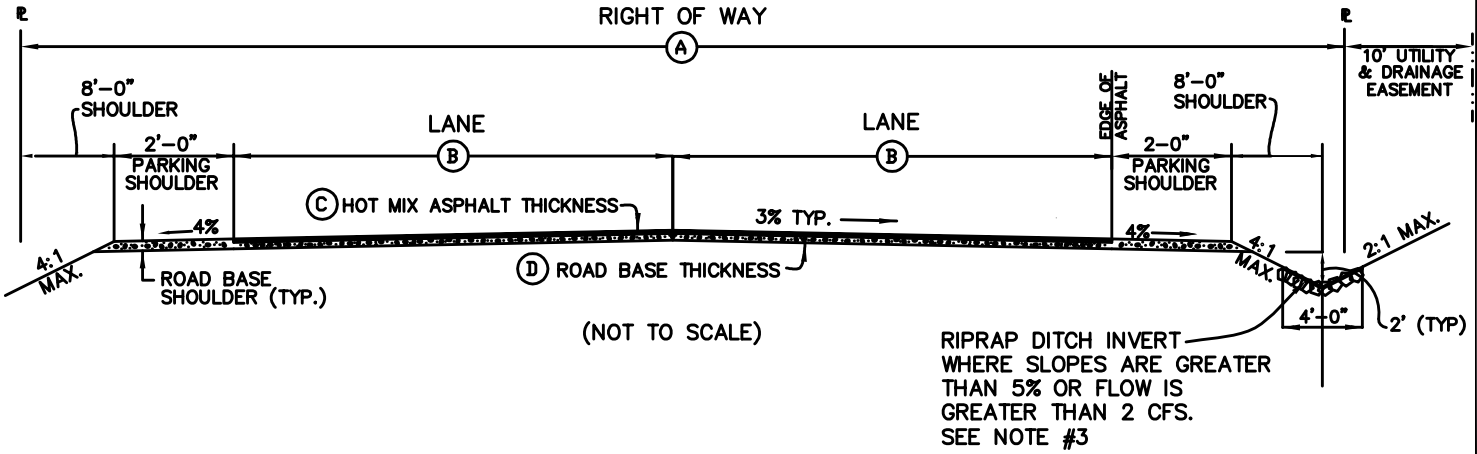

DIMENSIONS				
MARK	LOCAL	MINOR COLLECTOR	MAJOR COLLECTOR	ARTERIAL
A	50'	60'	66'	80'+
B	14'	19'	22'	29'(MIN)
C(MIN)	3"	3"	3"	4"
D	SEE STANDARD SPECIFICATIONS			

NOTES:

1) AREA BETWEEN EDGE OF ASPHALT AND PROPERTY LINE SHALL NOT BE PAVED EXCEPT AT DRIVES.

2) ALL DRAINAGE MUST SLOPE AWAY FROM PAVEMENT EDGE. DO NOT CHANNEL WATER ALONG ROADWAY EDGE.

3) OTHER EROSION CONTROL MATERIALS MAY BE USED UPON APPROVAL OF THE COUNTY REPRESENTATIVE.

4) 10' MINIMUM WIDE UTILITY EASEMENT REQUIRED OUTSIDE OF RIGHT OF WAY, BOTH SIDES OF STREET.

WASHINGTON COUNTY PUBLIC WORKS DEPARTMENT

REVISIONS				
DATE	DESCRIPTION	BY	STANDARD ROAD CROSS-SECTIONS WITH DITCHES	STANDARD DWG. NO. 141 — 1 OF 1
				APPROVED:
				DATE: MAY 2009 — BY: TE

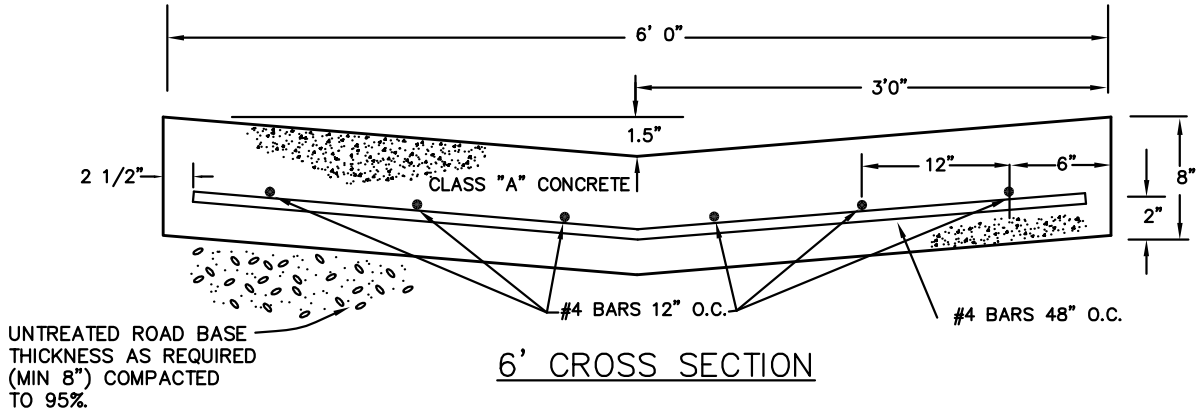

6' CROSS SECTION

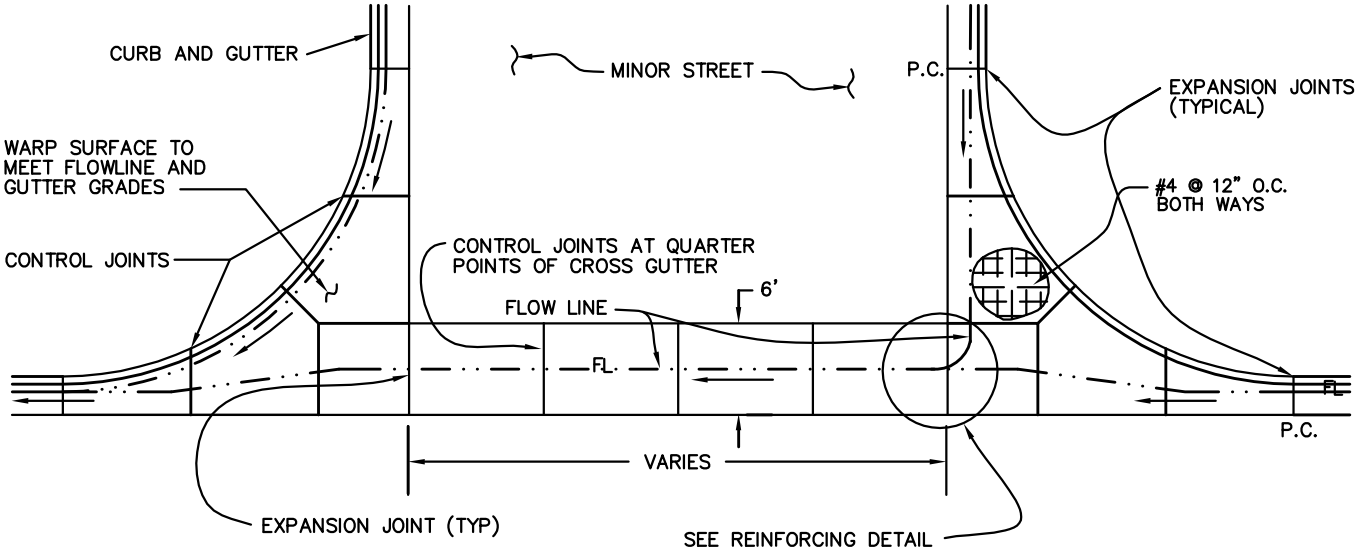

NOTES:

1– FOR USE ON RESIDENTIAL & COMMERCIAL STREETS.

2– CROSS GUTTERS ARE USED AT INTERSECTIONS ONLY UNLESS OTHERWISE APPROVED.

3– CROSS GUTTER SHALL CROSS THE MINOR STREET.

4– ALL REINFORCING STEEL SHALL HAVE 2–INCH MINIMUM CLEAR COVER. SUPPORT CHAIRS, BLOCKS OR OTHER APPROVED EQUAL SHALL BE USED TO RAISE STEEL OFF GROUND.

5– REINFORCING TO EXTEND TO LIMITS OF CROSS GUTTER.

6– ALL REINFORCING STEEL SHALL BE GRADE 60 ASTM A 615.

PLAN

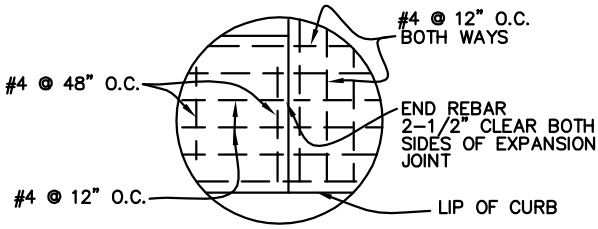

REINFORCING DETAIL

WASHINGTON COUNTY PUBLIC WORKS DEPARTMENT

REVISIONS			STANDARD 6' CROSS GUTTER	STANDARD DWG. NO.	
DATE	DESCRIPTION	BY		151	1 OF 1
				APPROVED:	
				DATE: MAY 2009	BY:

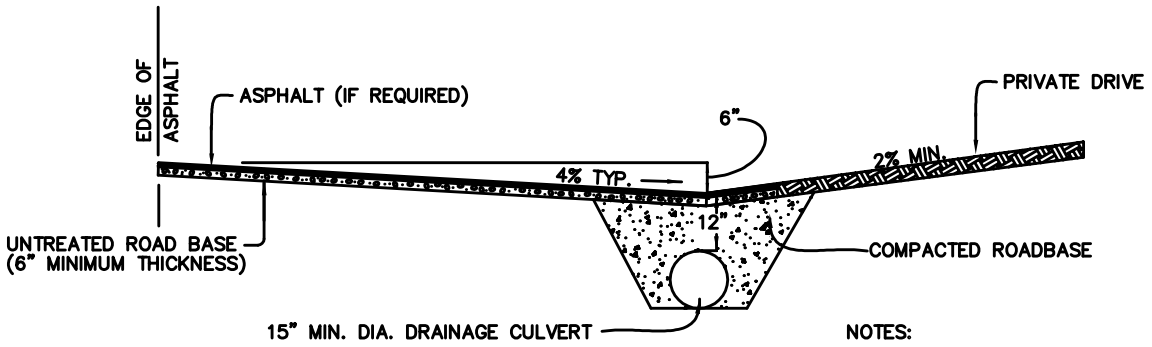

SECTION AT DRIVEWAY ℄

NOTES:

1– ALL PIPE AND INSTALLATION TO TO MEET COUNTY STANDARDS.

2– CULVERT TO HAVE A MINIMUM SLOPE OF 0.75%.

3– DO NOT PAVE BETWEEN EDGE OF ASPHALT AND DRAINAGE DITCH EXCEPT AT DRIVEWAY.

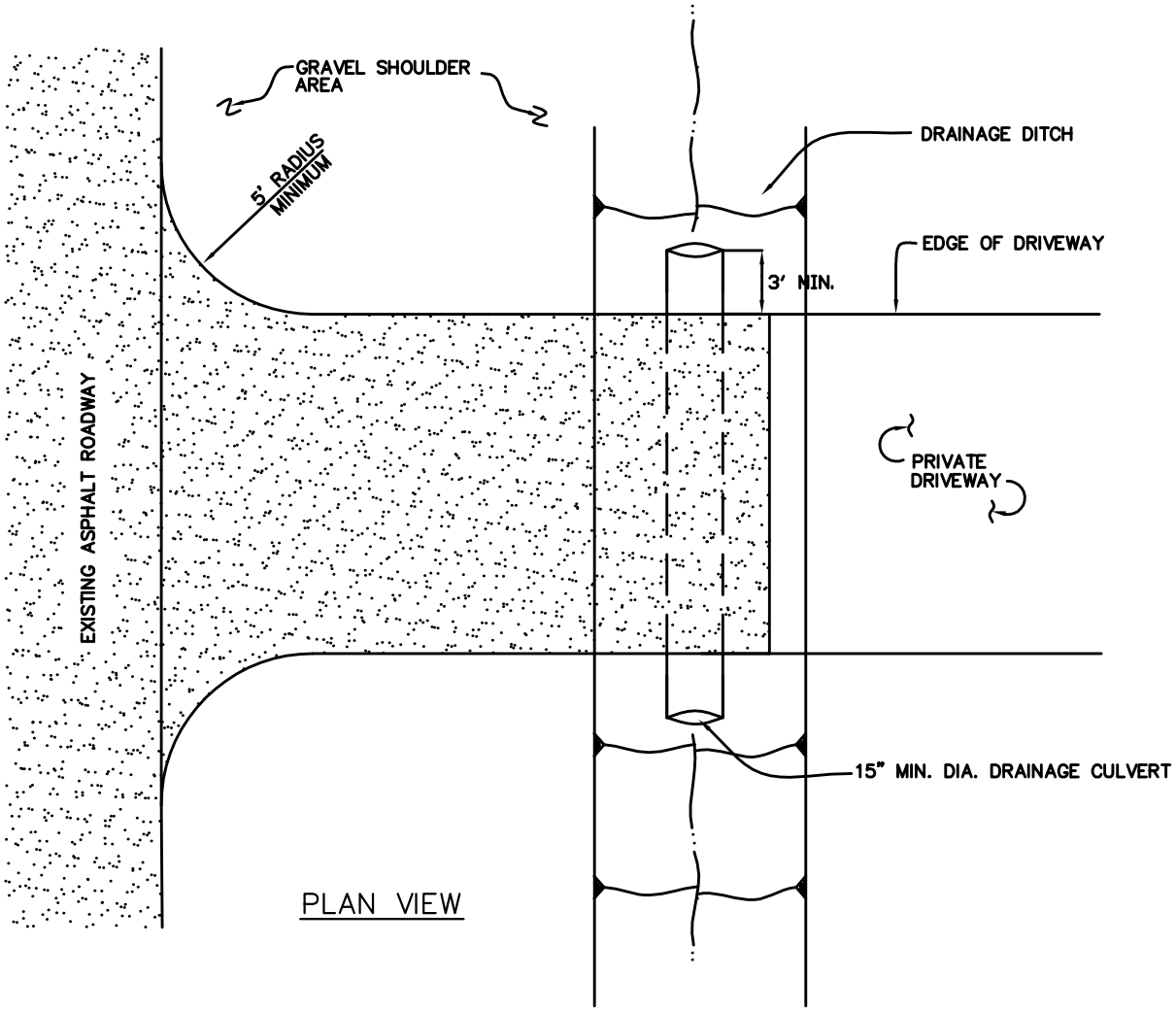

PLAN VIEW

WASHINGTON COUNTY PUBLIC WORKS DEPARTMENT					
REVISIONS			DRIVEWAY ACCESS DETAILS WITHOUT CURBING	STANDARD DWG. NO.	
DATE	DESCRIPTION	BY		152	1 OF 1
				APPROVED:	
				DATE: MAY 2009	BY:

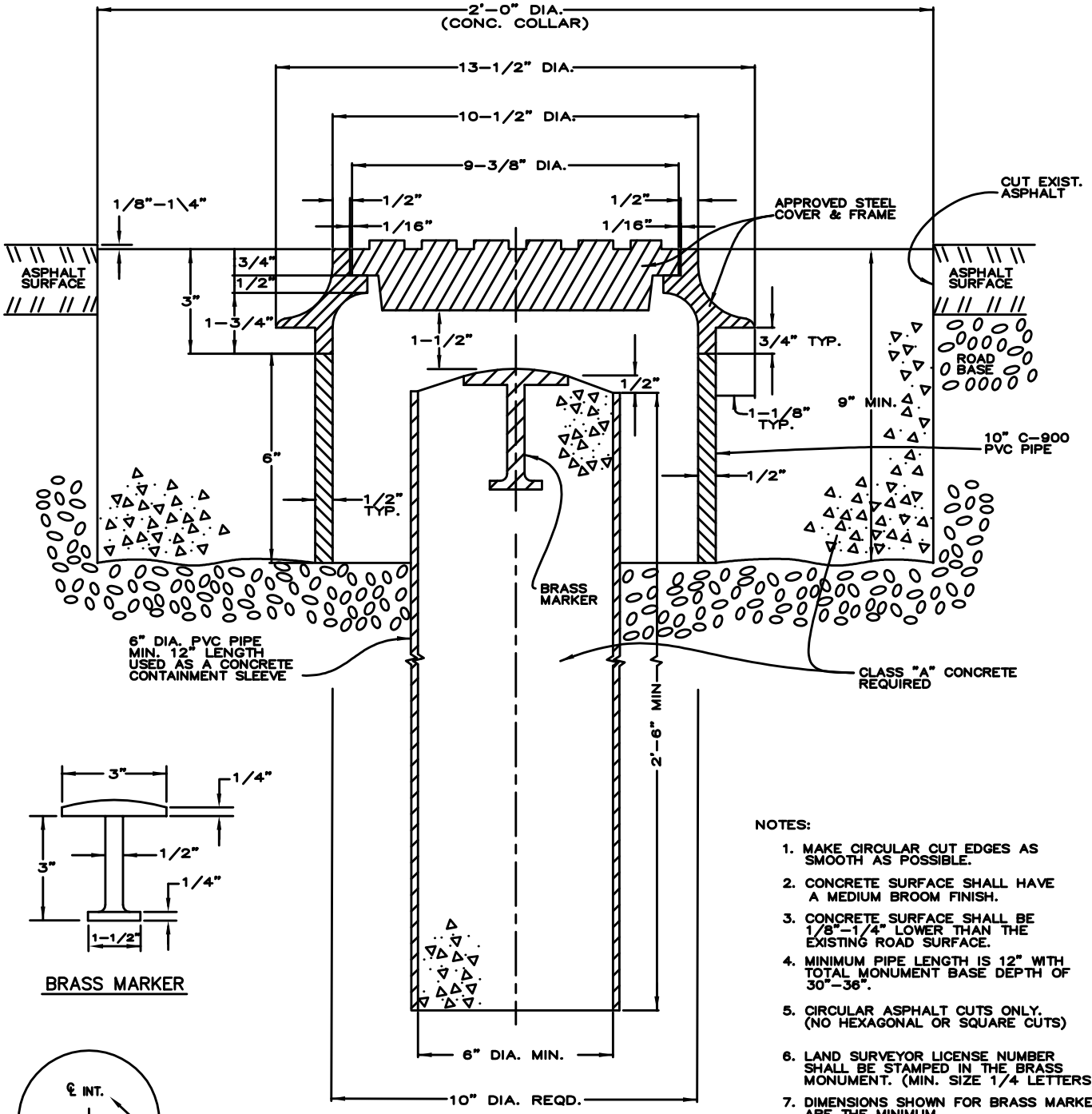

BRASS MARKER

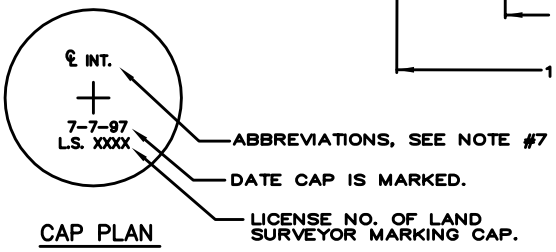

CAP PLAN

NOTES:

1. MAKE CIRCULAR CUT EDGES AS SMOOTH AS POSSIBLE.
2. CONCRETE SURFACE SHALL HAVE A MEDIUM BROOM FINISH.
3. CONCRETE SURFACE SHALL BE 1/8"-1/4" LOWER THAN THE EXISTING ROAD SURFACE.
4. MINIMUM PIPE LENGTH IS 12" WITH TOTAL MONUMENT BASE DEPTH OF 30"-36".
5. CIRCULAR ASPHALT CUTS ONLY. (NO HEXAGONAL OR SQUARE CUTS)
6. LAND SURVEYOR LICENSE NUMBER SHALL BE STAMPED IN THE BRASS MONUMENT. (MIN. SIZE 1/4 LETTERS)
7. DIMENSIONS SHOWN FOR BRASS MARKER ARE THE MINIMUM.
8. SEE COUNTY SURVEYOR FOR LIST OF COMMONLY USED ABBREVIATIONS.

WASHINGTON COUNTY PUBLIC WORKS DEPARTMENT

REVISIONS				STANDARD DWG. NO.	
DATE	DESCRIPTION	BY	CLASS I STANDARD MONUMENT DETAILS	160	1 OF 1
				APPROVED:	
				DATE: MAY 2009	BY:

NOTES:

1– TYPE II MONUMENTS TO BE SET AT ALL CENTERLINE CONTROL POINTS NOT OTHERWISE IDENTIFIED BY A TYPE I MONUMENT AND AS REQUIRED BY THE COUNTY SURVEYOR.

2– THE REGISTERED LAND SURVEYOR'S NUMBER, AND A PUNCH MARK ARE TO APPEAR ON THE SURFACE OF THE CAP.

3– ALUMINUM CAP SHALL BE SET FLUSH WITH SURFACE OF ROAD.

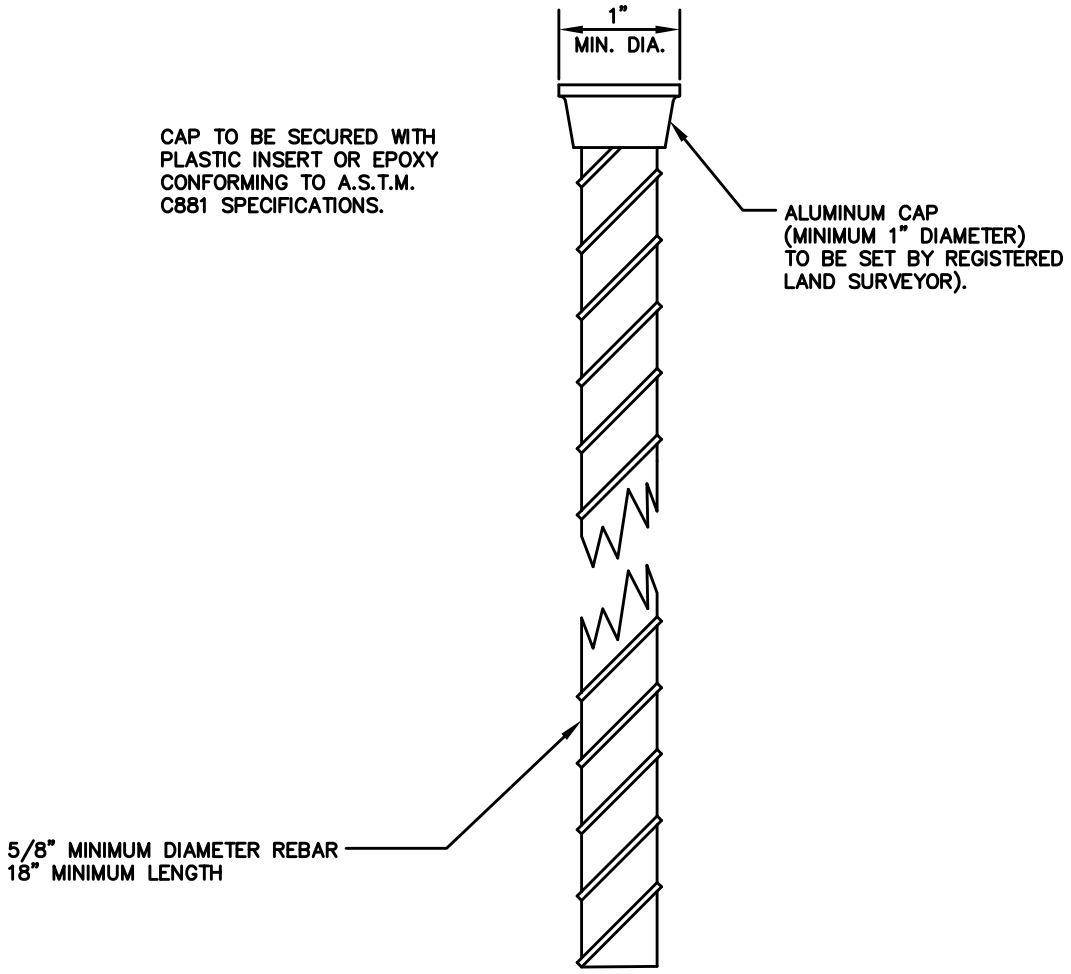

TYPE II MONUMENT

WASHINGTON COUNTY PUBLIC WORKS DEPARTMENT

REVISIONS			CLASS II MONUMENT	STANDARD DWG. NO.	
DATE	DESCRIPTION	BY		161	1 OF 1
				APPROVED:	
				DATE: MAY 2009	BY:

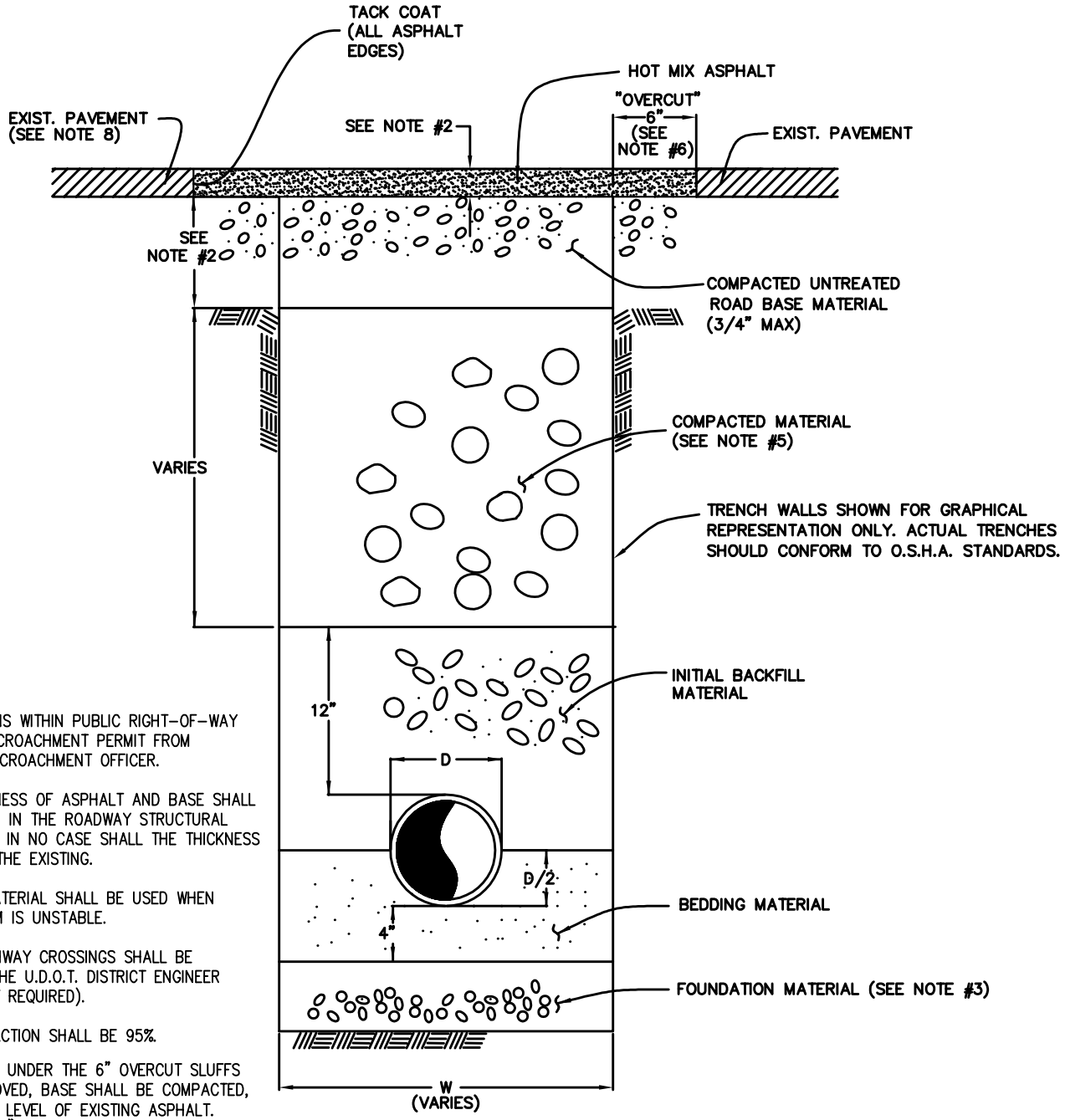

NOTES:

1– ALL EXCAVATIONS WITHIN PUBLIC RIGHT–OF–WAY REQUIRE AN ENCROACHMENT PERMIT FROM THE COUNTY ENCROACHMENT OFFICER.

2– MINIMUM THICKNESS OF ASPHALT AND BASE SHALL BE AS OUTLINED IN THE ROADWAY STRUCTURAL REQUIREMENTS. IN NO CASE SHALL THE THICKNESS BE LESS THAN THE EXISTING.

3– FOUNDATION MATERIAL SHALL BE USED WHEN TRENCH BOTTOM IS UNSTABLE.

4– ALL STATE HIGHWAY CROSSINGS SHALL BE APPROVED BY THE U.D.O.T. DISTRICT ENGINEER (U.D.O.T. PERMIT REQUIRED).

5– MINIMUM COMPACTION SHALL BE 95%.

6– WHEN MATERIAL UNDER THE 6" OVERCUT SLUFFS OFF OR IS REMOVED, BASE SHALL BE COMPACTED, TO THE BOTTOM LEVEL OF EXISTING ASPHALT. AN ADDITIONAL 6" IN WIDTH OF ASPHALT SHALL BE CUT, REMOVED AND REPLACED AS PART OF THE OVERALL PATCH.

7– WHERE ROAD SECTION HAS A DESIGNED GRANULAR SUB–BASE, IT SHALL BE REPLACED IN KIND OR WITH ROAD BASE GRAVEL.

8– IN GENERAL, STREET SURFACES LESS THAN 24 MONTHS OLD WILL NOT BE CUT! IF A CUT MUST BE MADE, ADDITIONAL, STRICTER REQUIREMENTS MAY BE INVOKED. SEE ENCROACHMENT OFFICER.

9– 24 HOUR NOTICE REQUIRED ON ALL INSPECTIONS.

10– ALL TRENCH BACKFILL SHALL MEET MIN. COMPACTION REQUIREMENTS.

11– EXCLUDING EMERGENCY CLOSURES ALL ROAD CLOSURES AND DETOURS REQUIRE 48 HOURS PRIOR NOTICE.

WASHINGTON COUNTY PUBLIC WORKS DEPARTMENT

REVISIONS				
DATE	DESCRIPTION	BY	TRENCH BACKFILL AND REPAIR DETAIL	STANDARD DWG. NO. 170 — 1 OF 1
				APPROVED:
				DATE: MAY 2009 — BY:

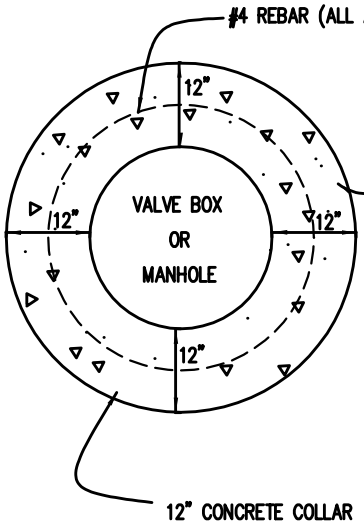

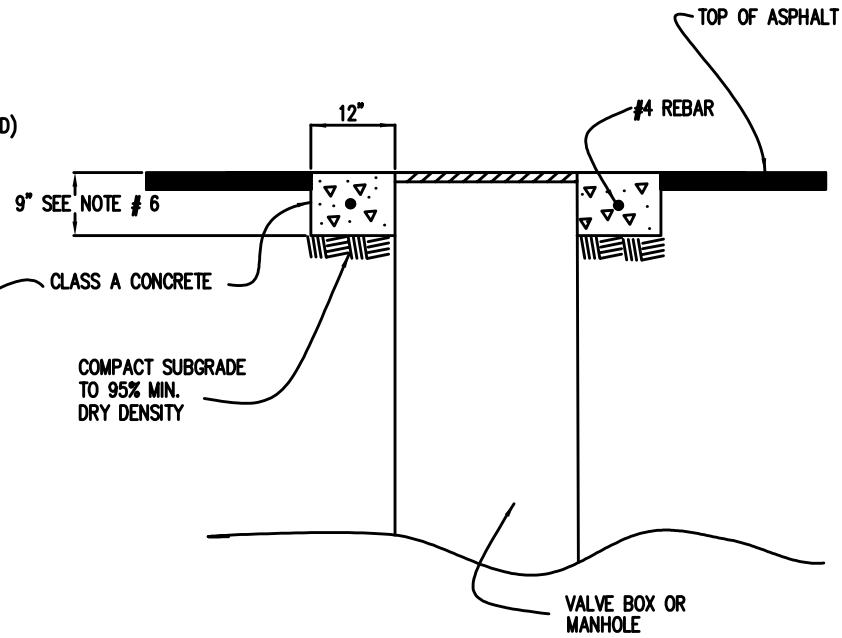

PLAN

SECTION

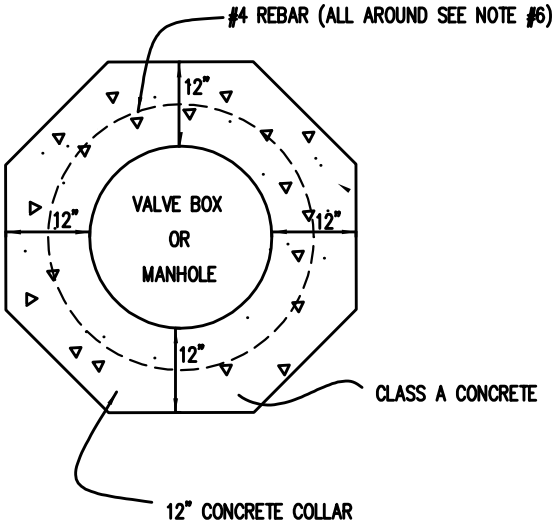

PLAN

OPTIONAL

NOTES:

1- MANHOLES, VALVE BOXES AND OTHER SIMILAR ITEMS SHALL BE ADJUSTED TO GRADE AFTER PAVING IS COMPLETE.

2- THE SURFACE OF THE ADJUSTED RING SHALL MATCH THE GRADE OF THE CONCRETE COLLAR. CONCRETE COLLAR SHALL BE 1/8" - 1/4" LOWER THAN ASPHALT.

3- ASPHALT SHALL BE CUT IN STRAIGHT VERTICAL LINES.

4- ADJUSTMENTS TO GRADE SHALL BE MADE WITH STANDARD RINGS OR EXTENTIONS OR AS APPROVED BY THE COUNTY REPRESENTATIVE.

5- ALL MANHOLES, VALVE BOXES AND OTHER SIMILAR ITEMS SHALL HAVE CONCRETE COLLAR AS REQUIRED UNLESS OTHERWISE APPROVED.

6- 9" THICK COLLARS SHALL BE REINFORCED.
12 " THICK COLLARS DO NOT REQUIRE REINFORCEMENT.

7- MARK CONCRETE COLLAR ON WATER VALVE BOXES WITH ARROW INDICATING DIRECTION OF FLOW.

WASHINGTON COUNTY PUBLIC WORKS DEPARTMENT

REVISIONS				
DATE	DESCRIPTION	BY	MANHOLES & VALVE BOXES CONCRETE COLLAR	STANDARD DWG. NO. 171 — 1 OF 1
				APPROVED:
				DATE: MAY 2009 — BY:

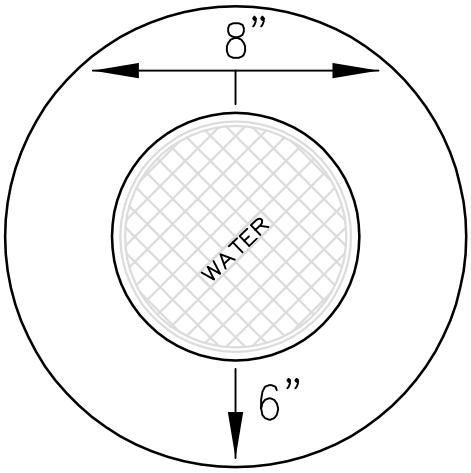

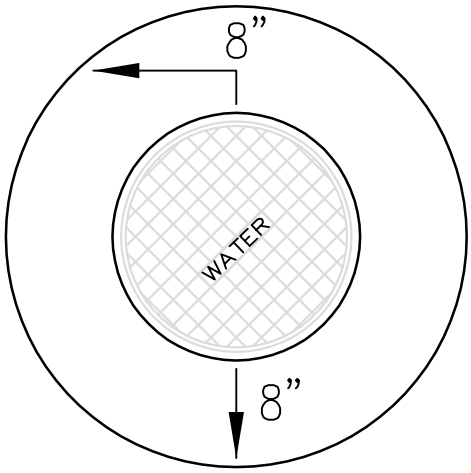

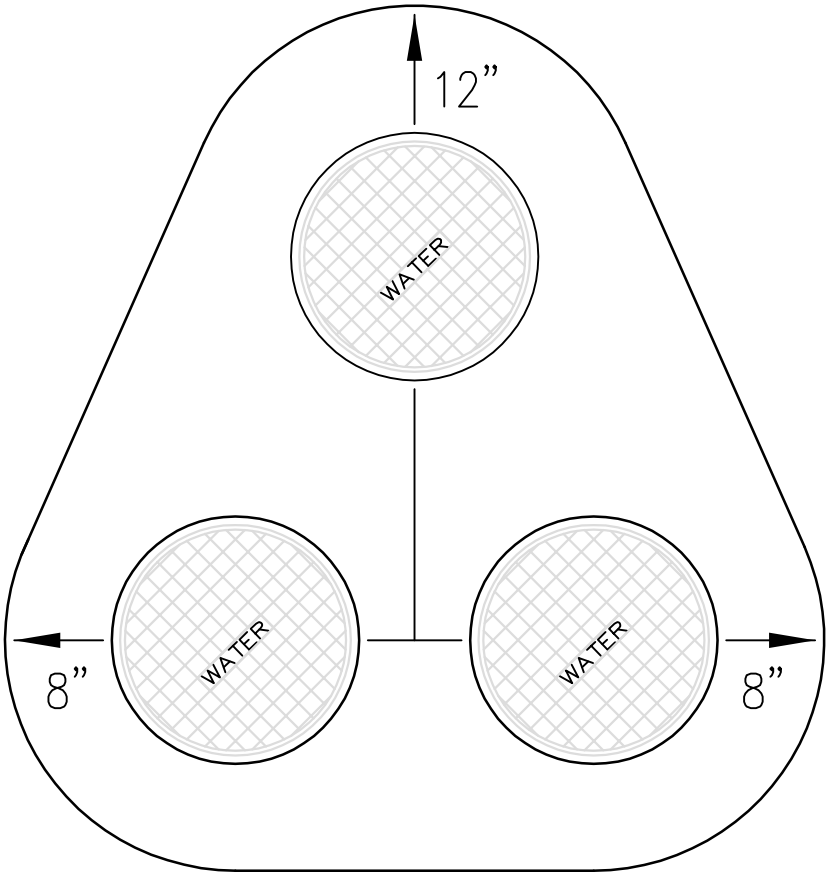

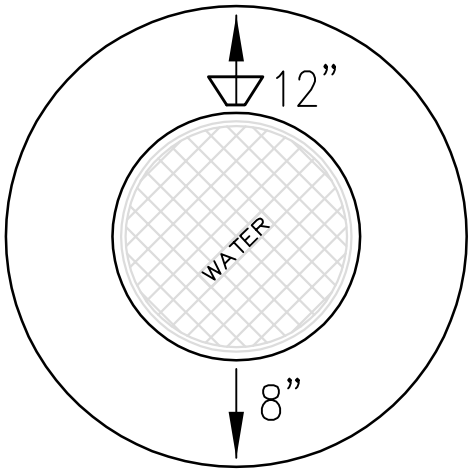

NOTE:
WATER VALVE COLLARS SHALL BE ENGRAVED WITH A SCHEMATIC OF FITTINGS AND PIPE SIZES

WASHINGTON COUNTY PUBLIC WORKS DEPARTMENT					
REVISIONS			WATER VALVE COLLAR ENGRAVINGS	STANDARD DWG. NO.	
DATE	DESCRIPTION	BY		172	1 OF 1
				APPROVED:	
				DATE: MAY 2009	BY: TE

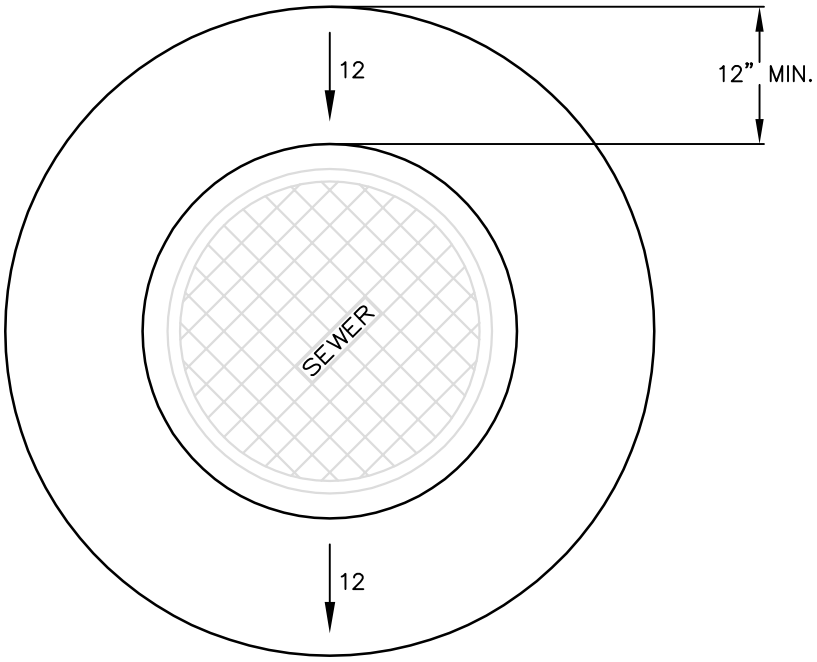

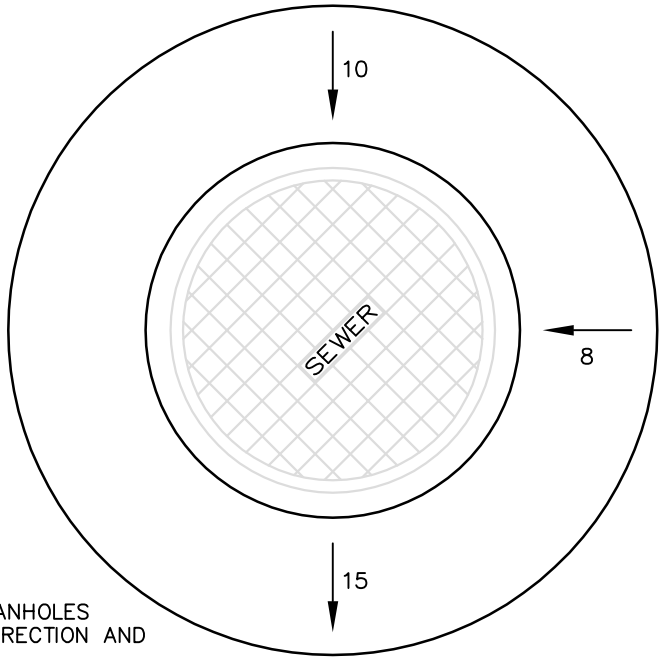

NOTE:

CONCRETE COLLARS FOR SEWER MANHOLES SHALL BE ENGRAVED WITH FLOW DIRECTION AND SIZE OF PIPE.

WASHINGTON COUNTY PUBLIC WORKS DEPARTMENT

REVISIONS				
DATE	DESCRIPTION	BY	SEWER MANHOLE COLLAR ENGRAVINGS	STANDARD DWG. NO. 173 — 1 OF 1
				APPROVED:
				DATE: MAY 2009 BY: TE

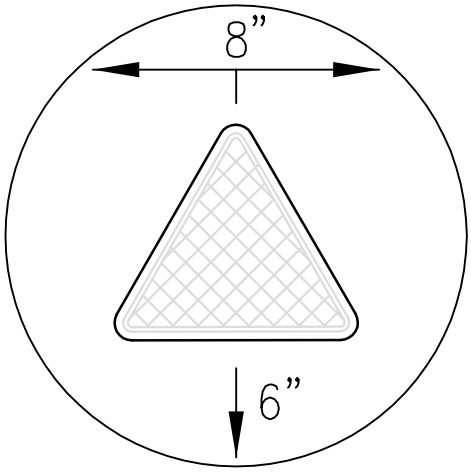

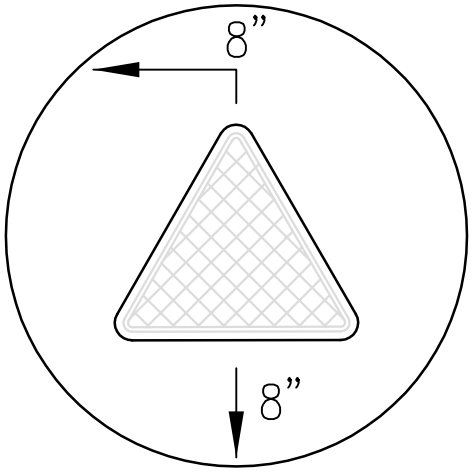

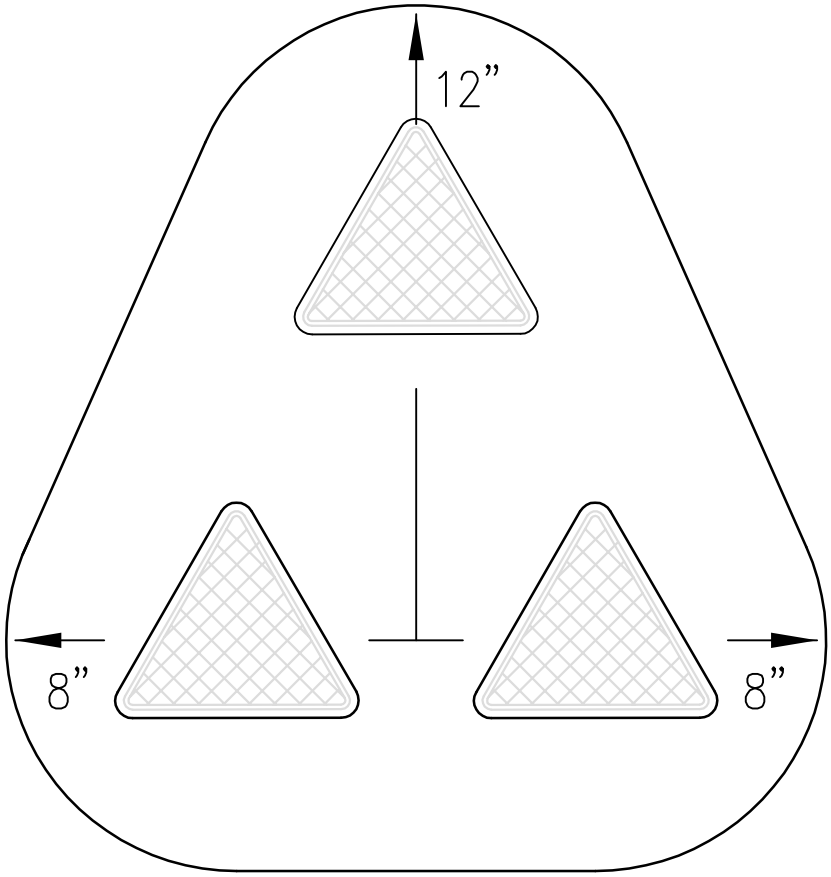

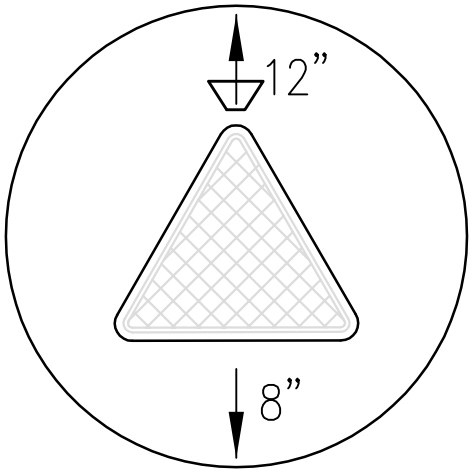

NOTE:
IRRIGATION VALVE COLLARS SHALL BE ENGRAVED WITH A SCHEMATIC OF FITTINGS AND PIPE SIZES

WASHINGTON COUNTY PUBLIC WORKS DEPARTMENT					
REVISIONS			IRRIGATION VALVE COLLAR ENGRAVINGS	STANDARD DWG. NO.	
DATE	DESCRIPTION	BY		174	1 OF 1
				APPROVED:	
				DATE: MAY 2009	BY: TE

NOTES:
1– USE BICYCLE SAFE GRATE ONLY UNLESS OTHERWISE APPROVED. SEE STANDARD DRAWING.
2– BOXES WITH PIPE SIZE GREATER THAN 15" DIAMETER AND BOXES GREATER THAN 4' IN DEPTH REQUIRE ENGINEERED DESIGN.
3– GRATES & FRAMES SHALL BE PAINTED WITH ONE COAT PRIMER AND ONE COAT LIGHT GREY FINISH. COATING APPLIED PER SPECIFICATIONS.

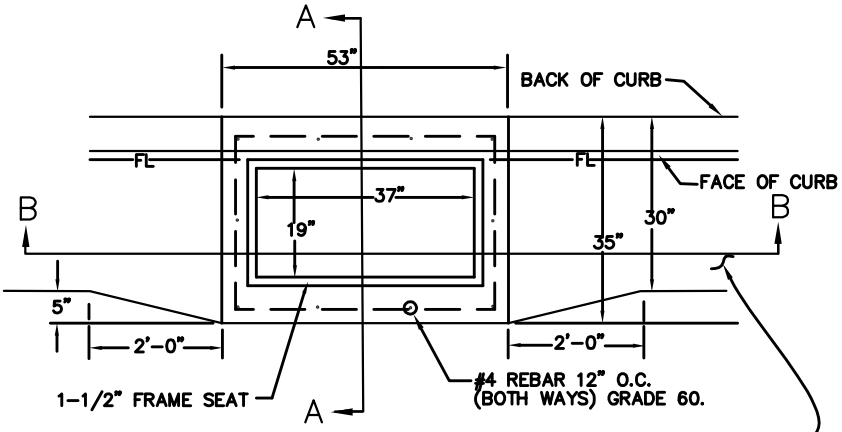

PLAN VIEW

HB 30-7 OR HB 30-8
CURB AND GUTTER

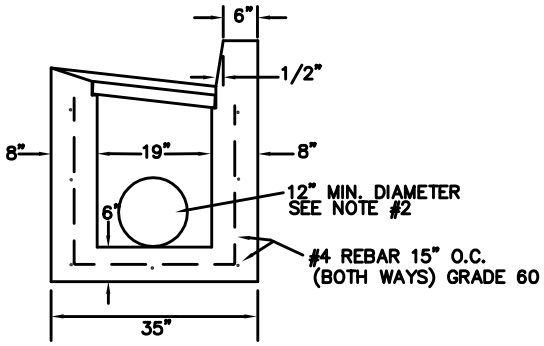

SECTION A–A

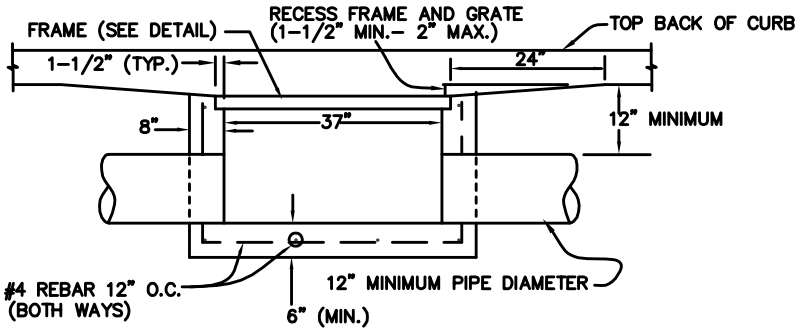

LONG DIMENSION OF BOX SHALL BE PARALLEL TO THE CURB & GUTTER.

SECTION B–B

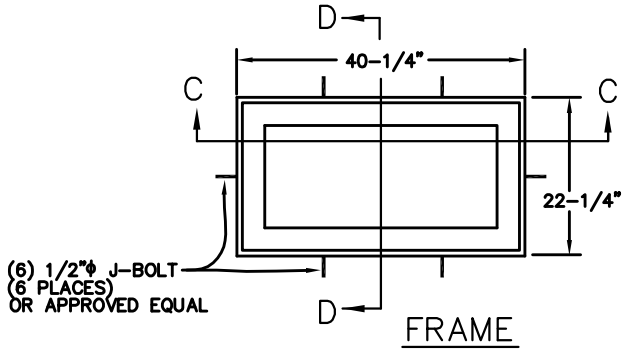

FRAME

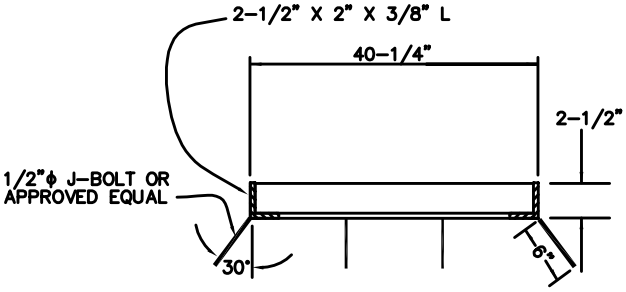

SECTION C–C

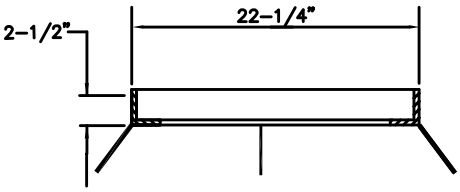

SECTION D–D

NO SCALE

WASHINGTON COUNTY PUBLIC WORKS DEPARTMENT

REVISIONS				
DATE	DESCRIPTION	BY	STANDARD CATCH BASIN BOX & FRAME	STANDARD DWG. NO. 200 — 1 OF 1
				APPROVED:
				DATE: MAY 2009 — BY:

NOTES:

1. USE ONLY GRADE 60 STEEL
2. PAINT ALL SURFACES OF GRATE. APPLY ONE COAT OF PRIMER , AND ONE FINISH COAT, (LIGHT GREY COLOR)

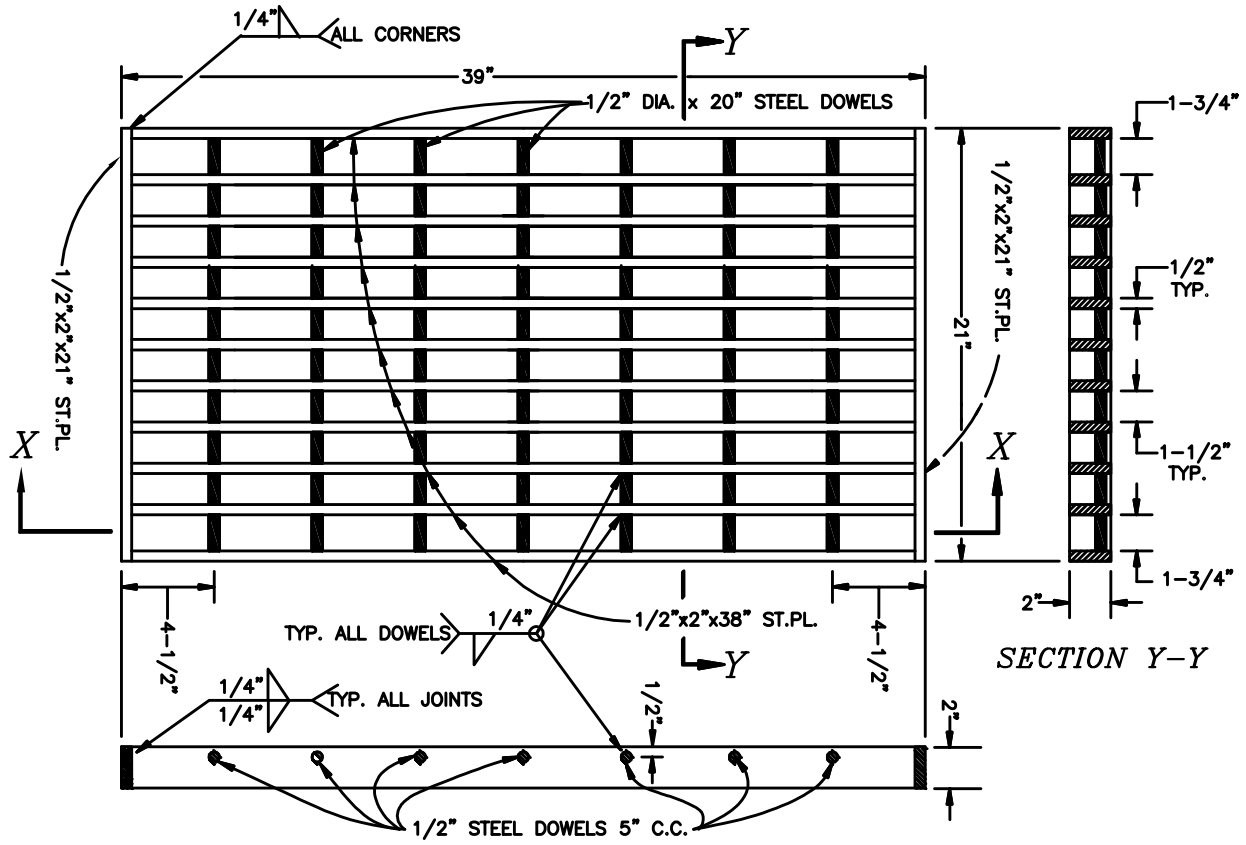

SECTION Y–Y

SECTION X–X

WASHINGTON COUNTY PUBLIC WORKS DEPARTMENT					
REVISIONS			STANDARD CATCH BASIN GRATE (BICYCLE SAFE)	STANDARD DWG. NO.	
DATE	DESCRIPTION	BY		202	1 OF 1
				APPROVED:	
				DATE: MAY 2009	BY:

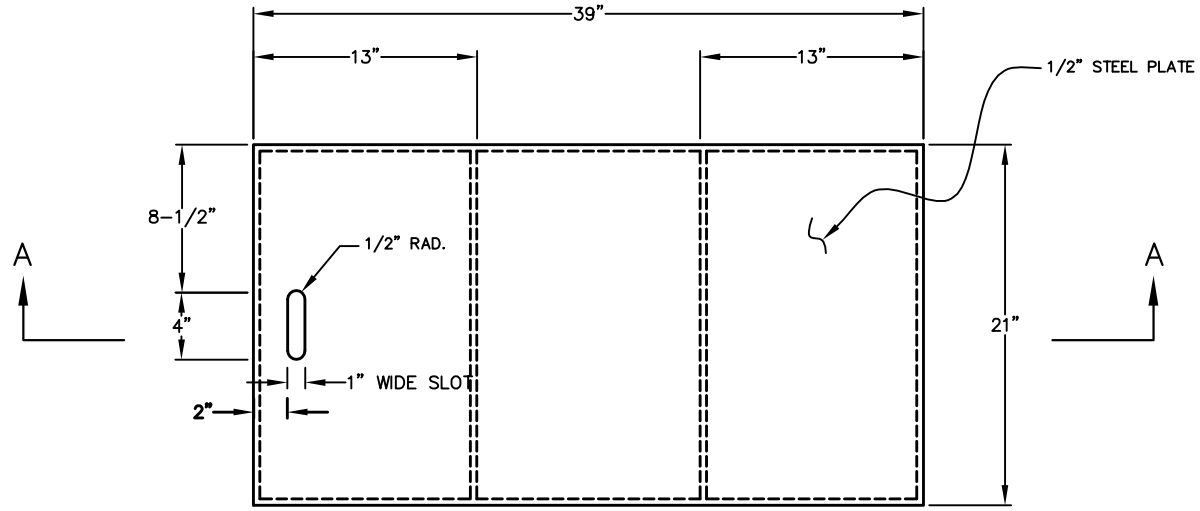

NOTES:
1- FINISH SHALL BE ONE COAT PRIMER, ONE FINISH COAT, LIGHT GRAY ENAMEL.
2- LID SHALL BE ALL WELDED CONSTRUCTION.
3- FOR USE IN NON-TRAFFIC INSTALLATIONS.
4- LID SHALL BE DIAMOND PLATE STEEL.

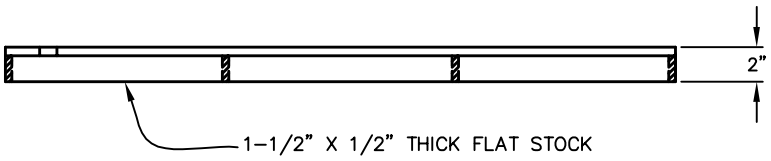

SECTION A-A

WASHINGTON COUNTY PUBLIC WORKS DEPARTMENT

REVISIONS				
DATE	DESCRIPTION	BY	39" SOLID LID DETAILS	STANDARD DWG. NO. 203 1 OF 1
				APPROVED:
				DATE: MAY 2009 BY:

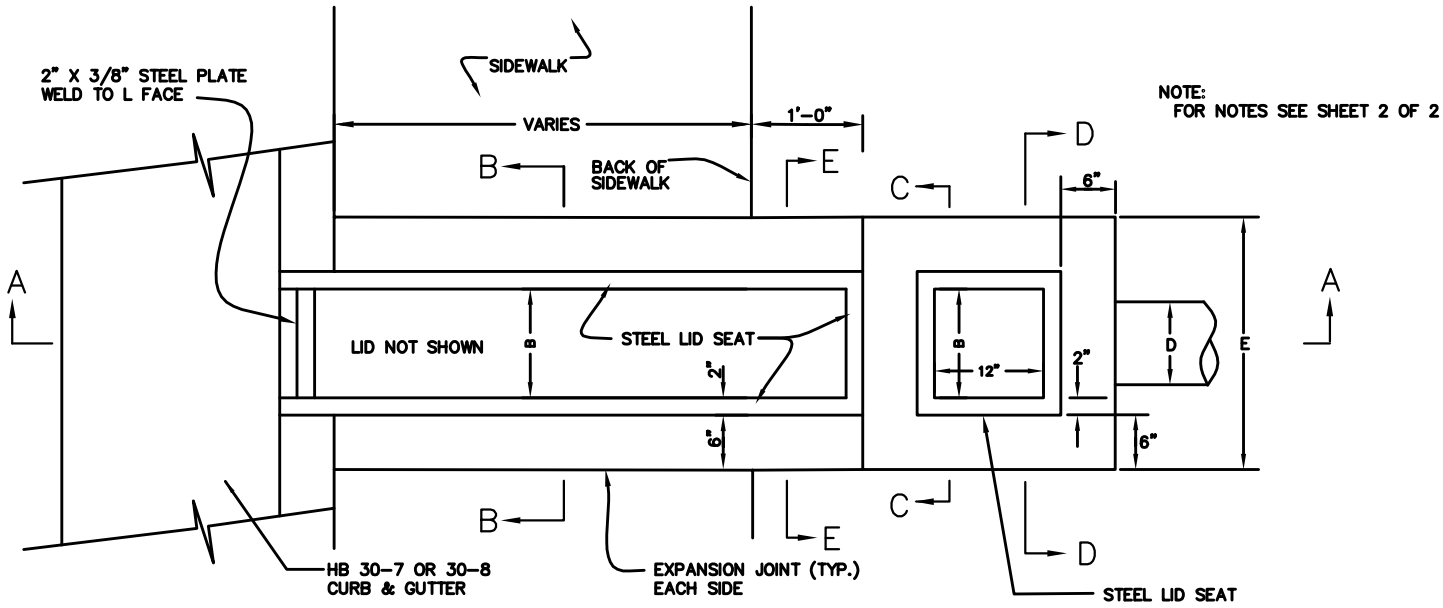

PLAN

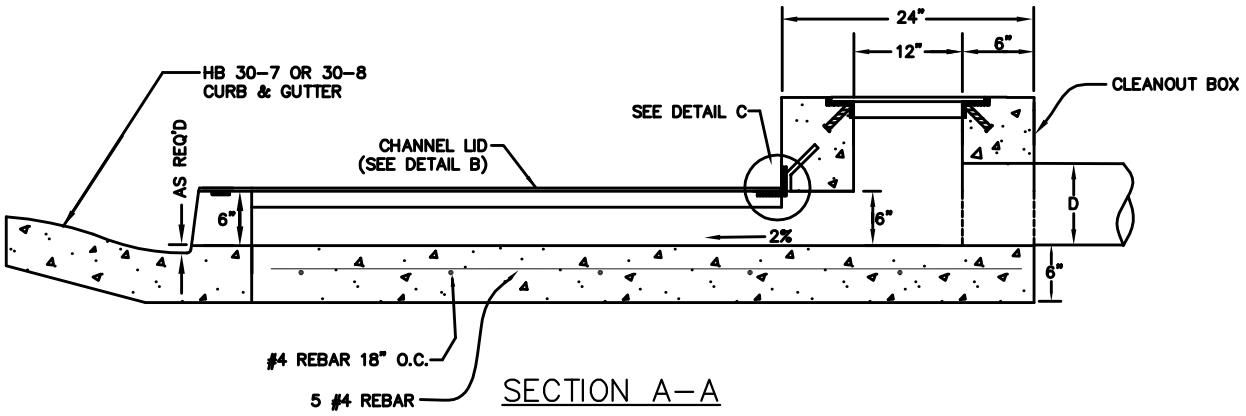

SECTION A–A

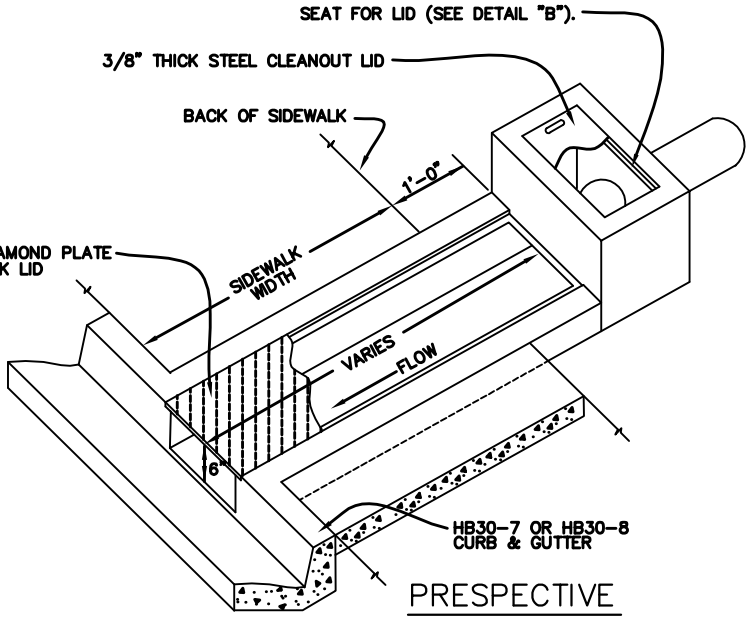

PRESPECTIVE

MARK	DIMENSION (INCHES)				COMMENTS
B	10	15	20	30*	INSIDE WIDTH
C	20	22	24	27	CLEANOUT BOX HEIGHT
D	≤8	10	12	15	INLET PIPE
E	22	27	32	42	BOX WIDTH
K	18	23	28	38	STEEL END SUPPORT

DIMENSION TABLE

*REQUIRES ENGINEERED DESIGN FOR LID & BOX.

WASHINGTON COUNTY PUBLIC WORKS DEPARTMENT

REVISIONS		
DATE	DESCRIPTION	BY

SIDEWALK DRAINAGE STRUCTURE

STANDARD DWG. NO.	
204A	1 OF 2
APPROVED:	
DATE: MAY 2009	BY:

NOTE:
STEEL LID TO BE FLUSH
WITH CONCRETE SIDEWALK.

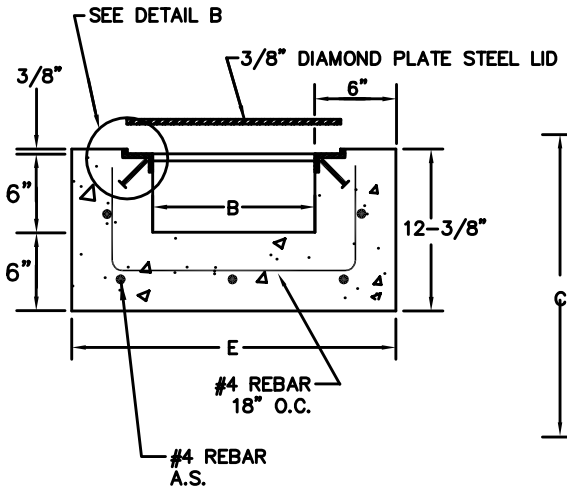

SECTION B-B

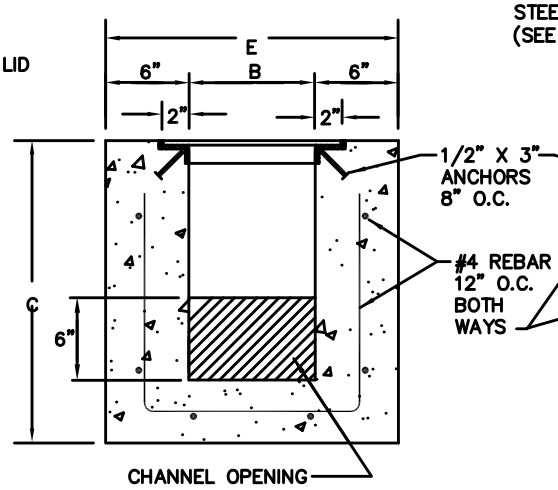

SECTION C-C

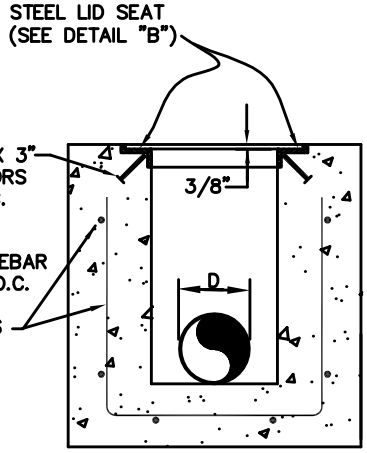

SECTION D-D

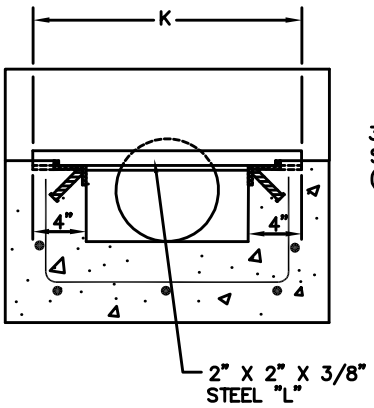

SECTION E-E

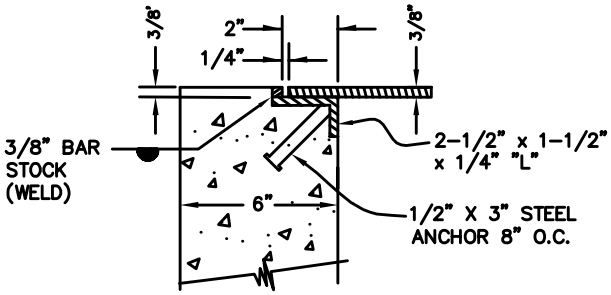

DETAIL B

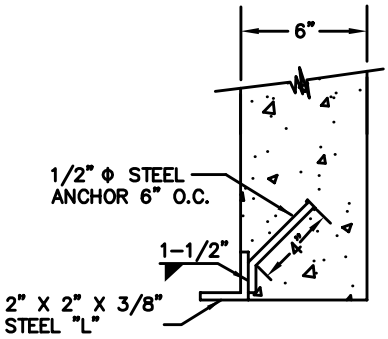

DETAIL C

MARK	DIMENSION (INCHES)				COMMENTS
B	10	15	20	30*	INSIDE WIDTH
C	20	22	24	27	CLEANOUT BOX HEIGHT
D	≤8	10	12	15	INLET PIPE
E	22	27	32	42	BOX WIDTH
K	18	23	28	38	STEEL END SUPPORT

DIMENSION TABLE

*REQUIRES ENGINEERED DESIGN FOR LID & BOX.

NOTES:
1- ALL REBAR SHALL HAVE 2" MIN. CLEAR.
2- STEEL LID SHALL BE FLUSH WITH CONCRETE.
3- BOX DIMENSIONS BASED UPON INLET PIPE SIZE "D".
4- ALL STEEL SHALL BE GRADE 60.
5- LID FOR CLEANOUT BOX SHALL HAVE 1-4 INCH X 1" SLOT FOR LIFTING. LID MAY BE SMOOTH OR DIAMOND PLATE STEEL.
6- SIDEWALK LID SHALL BE DIAMOND PLATE STEEL.
7- STANDARD REBAR SHALL NOT BE USED FOR STEEL ANCHORS.
8- ALL EXTERIOR EDGES OF CLEANOUT BOX TO HAVE 3/4" TO 1" CHAMFER (NOT SHOWN IN DETAILS FOR CLARITY).
9- STEEL LIDS AND SEAT TO BE PAINTED GREY

WASHINGTON COUNTY PUBLIC WORKS DEPARTMENT

REVISIONS		
DATE	DESCRIPTION	BY

SIDEWALK DRAINAGE STRUCTURE

STANDARD DWG. NO.	
204B	2 OF 2
APPROVED:	
DATE: MAY 2009	BY:

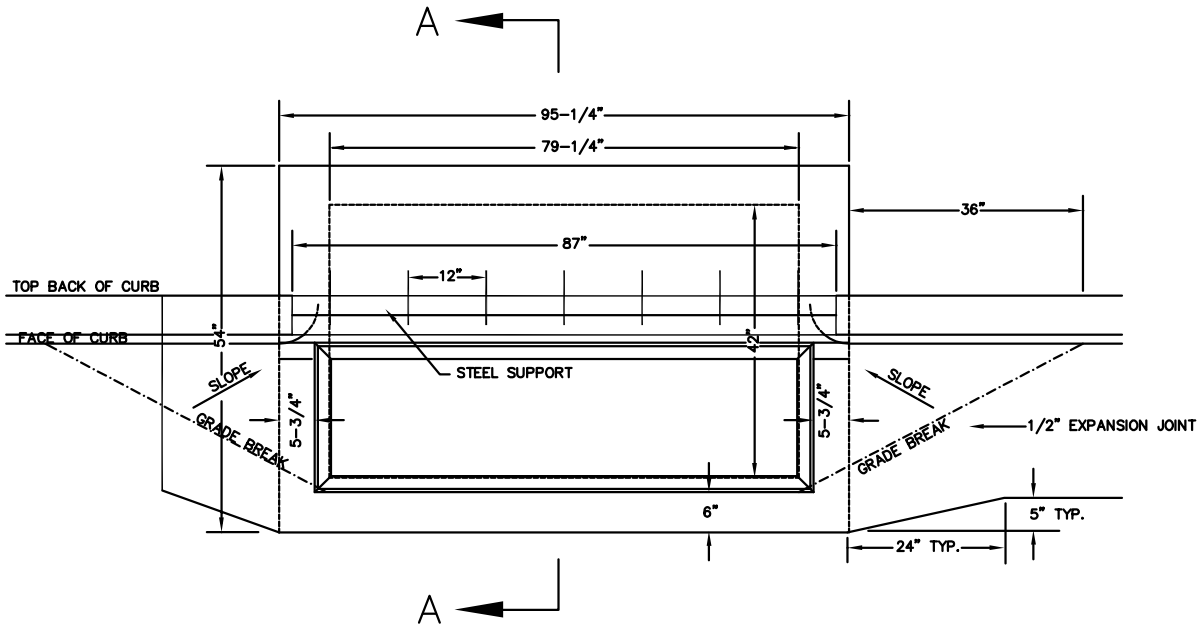

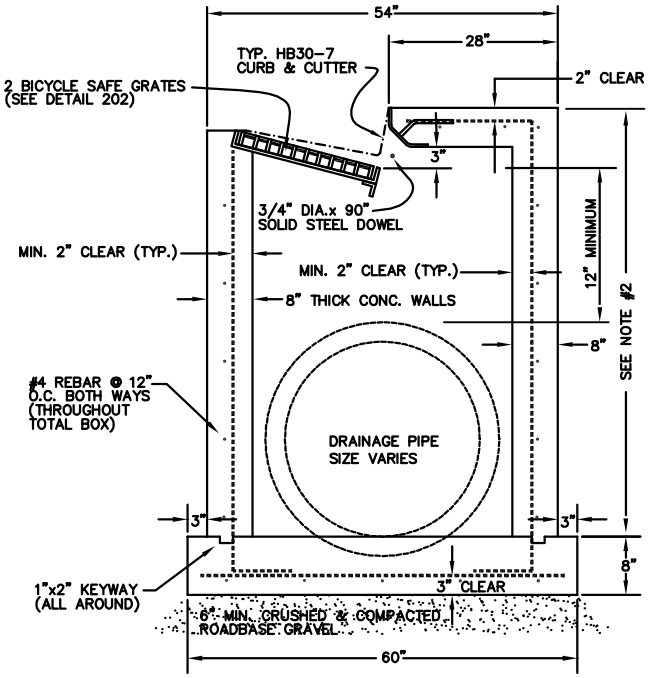

NOTES:

1- USE BICYCLE SAFE GRATES ONLY.

2- FOR PIPE SIZE GREATER THAN 42" DIAMETER AND 60" DEPTH ENGINEERED DESIGN REQUIRED.

SECTION A-A

WASHINGTON COUNTY PUBLIC WORKS DEPARTMENT					
REVISIONS			CURB INLET DOUBLE CATCH BASIN BOX	STANDARD DWG. NO.	
DATE	DESCRIPTION	BY		205A	1 OF 2
				APPROVED:	
				DATE: MAY 2009	BY:

PLAN VIEW

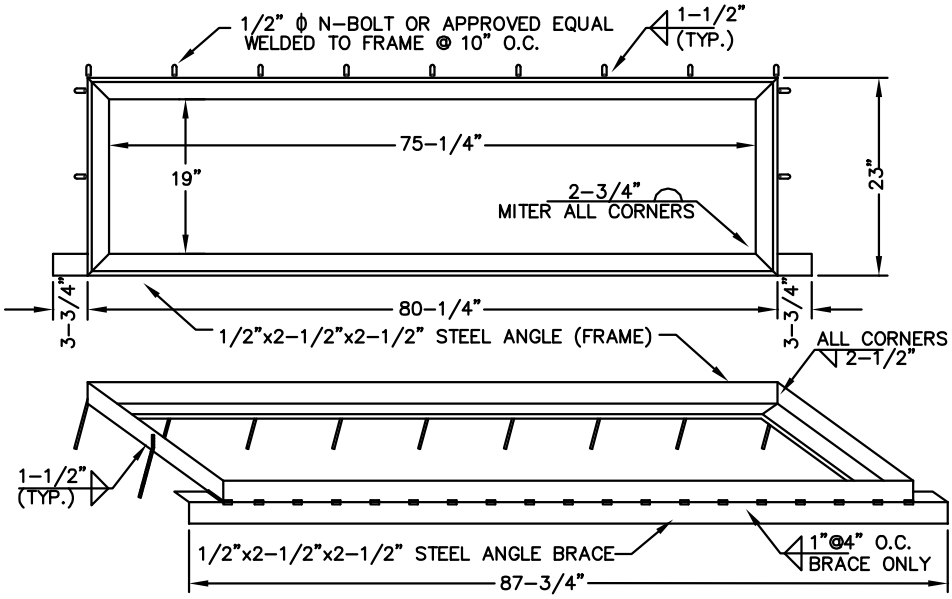

FRAME & SUPPORT BRACE

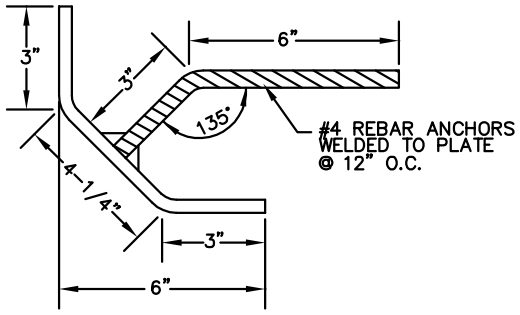

STEEL SUPPORT

NOTES:

1. FRAME SHALL BE PAINTED WITH ONE COAT PRIMER AND ONE COAT LIGHT GREY FINISH.

WASHINGTON COUNTY PUBLIC WORKS DEPARTMENT

REVISIONS				
DATE	DESCRIPTION	BY	CURB INLET DOUBLE CATCH BASIN FRAME	STANDARD DWG. NO. 205B 2 OF 2
				APPROVED:
				DATE: MAY 2009 BY:

TOP VIEW

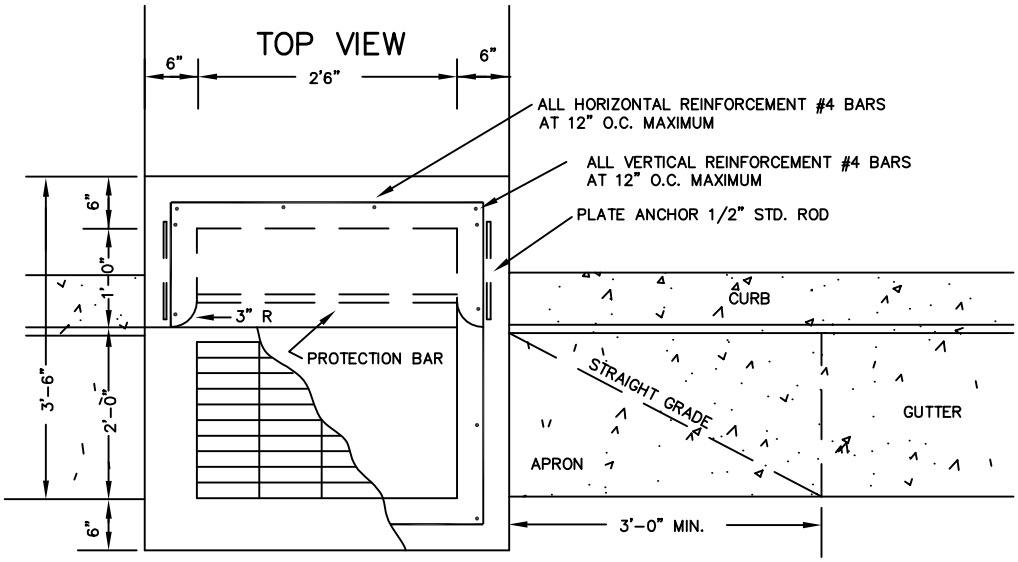

FRONT VIEW

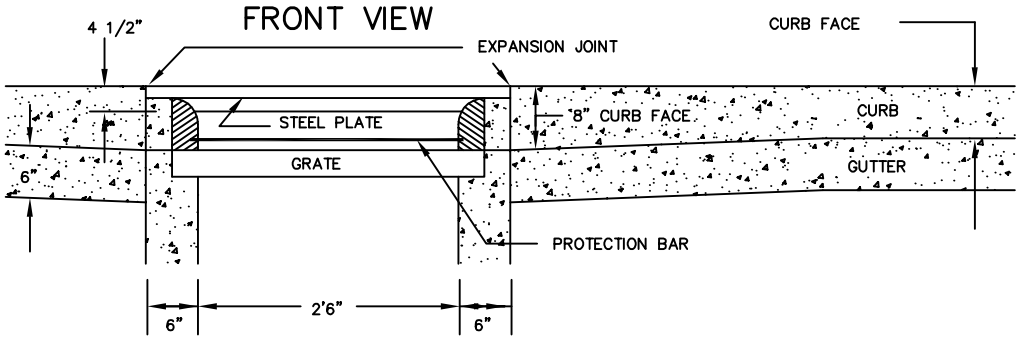

SIDE VIEW

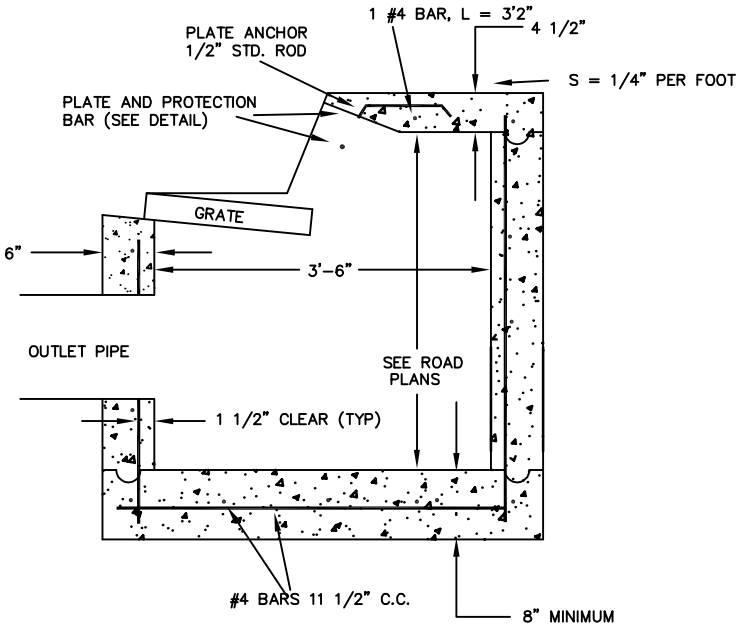

WASHINGTON COUNTY PUBLIC WORKS DEPARTMENT				
REVISIONS			CURB INLET SINGLE CATCH BASIN BOX	STANDARD DWG. NO.
DATE	DESCRIPTION	BY		206A 1 OF 2
				APPROVED:
				DATE: MAY 2009 BY: TE

FRAME AND GRATE PLAN

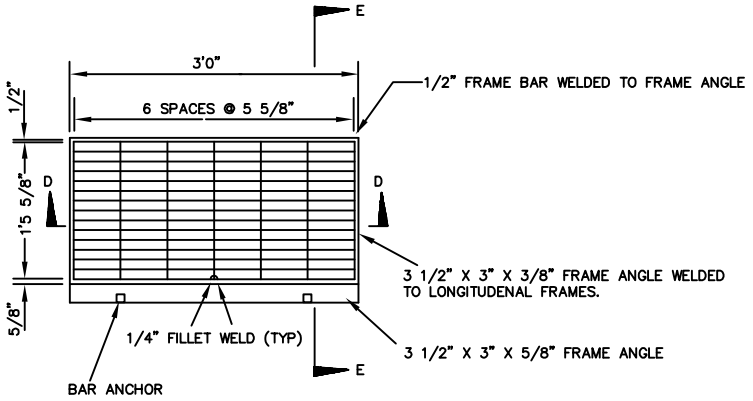

SECTION "D"–"D"

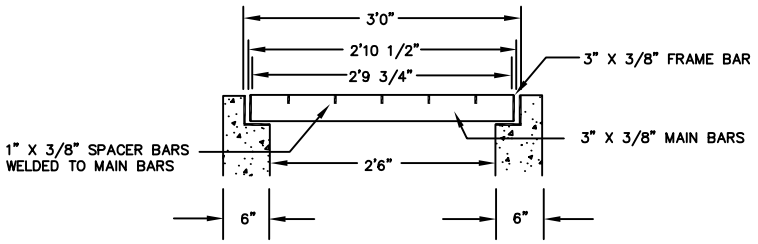

SECTION "E"–"E"

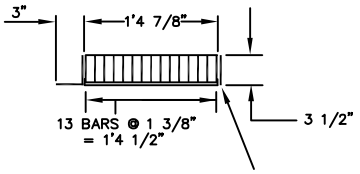

STEEL PLATE ANCHORAGE

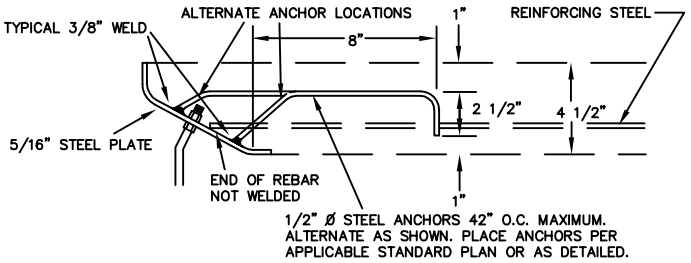

FRAME AND GRATE INSTALLATION

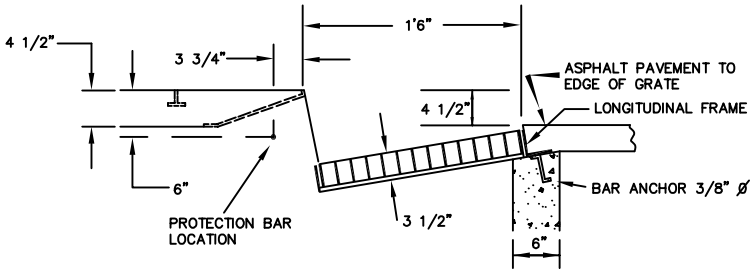

NOTES:

1. FRAME SHALL BE PAINTED WITH ONE COAT PRIMER AND ONE COAT LIGHT GREY FINISH.

WASHINGTON COUNTY PUBLIC WORKS DEPARTMENT

REVISIONS			CURB INLET SINGLE CATCH BASIN FRAME	STANDARD DWG. NO.	
DATE	DESCRIPTION	BY		206B	2 OF 2
				APPROVED:	
				DATE: MAY 2009	BY: TE

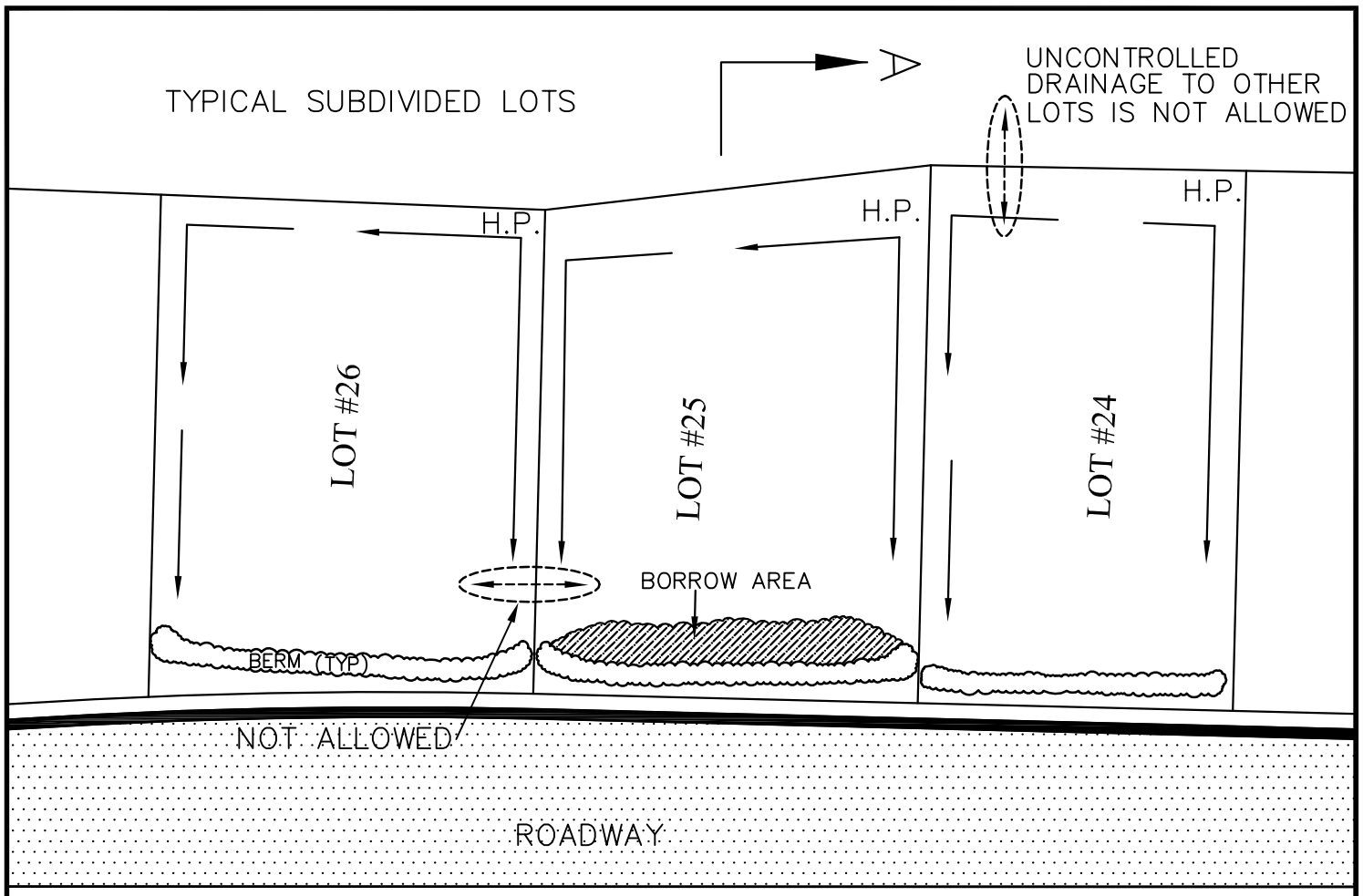

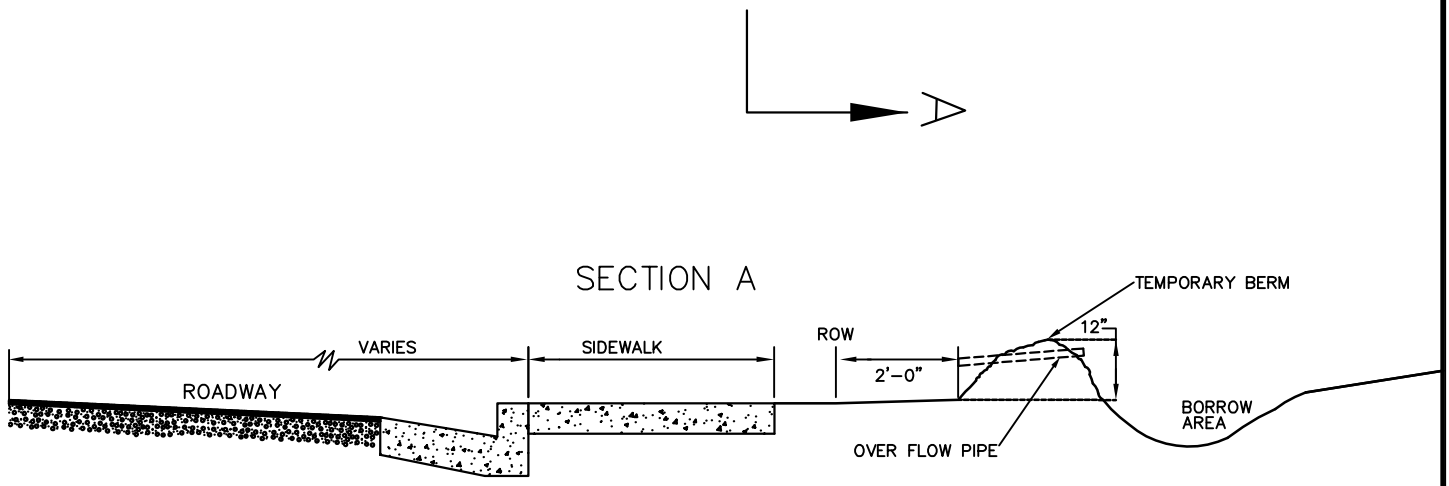

NOTES:

1. BERM SHALL INCLUDE 2" DIA. DRAIN PIPE. PIPE MUST EXTEND BEYOND THE OUTER FACE OF THE BERM.
2. EACH LOT MUST CONTAIN IT'S OWN STORM WATER.
3. CROSS LOT DRAINAGE SHALL NOT BE ALLOWED.

WASHINGTON COUNTY PUBLIC WORKS DEPARTMENT

REVISIONS				
DATE	DESCRIPTION	BY	TEMPORARY ON-SITE DRAINAGE RETENTION BERM FOR GRADED SUBDIVISION LOTS	STANDARD DWG. NO. 207 1 OF 1
				APPROVED:
				DATE: MAY 2009 BY:

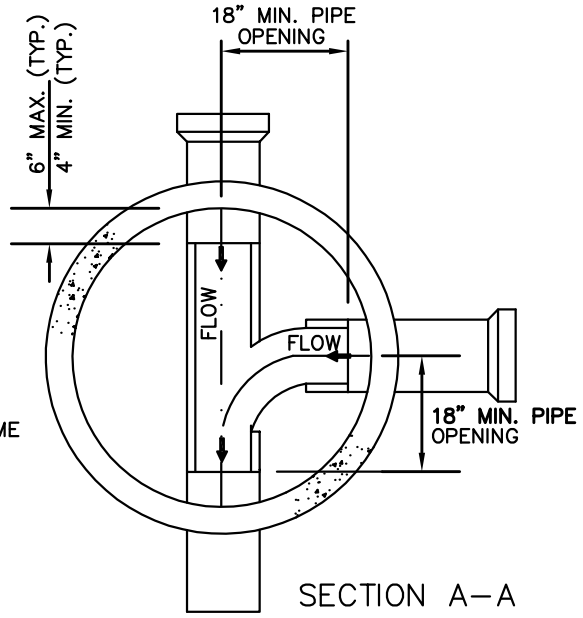

SECTION A–A

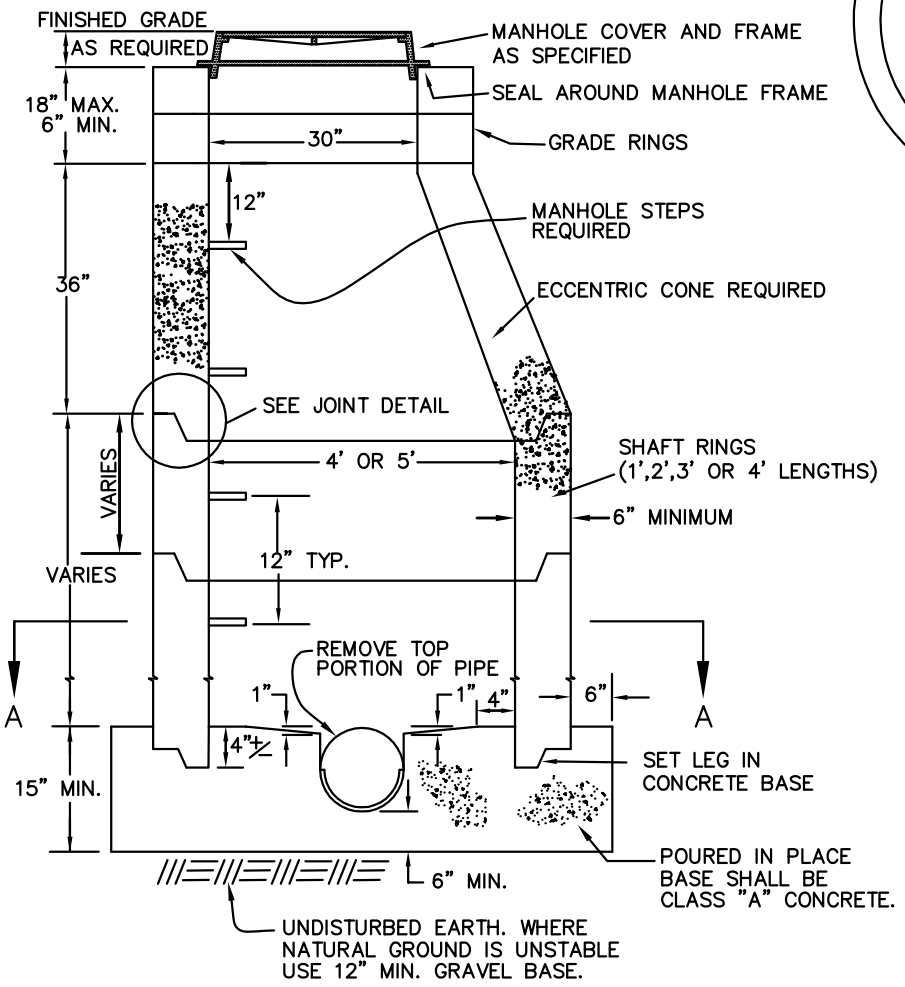

SECTION THRU CENTER

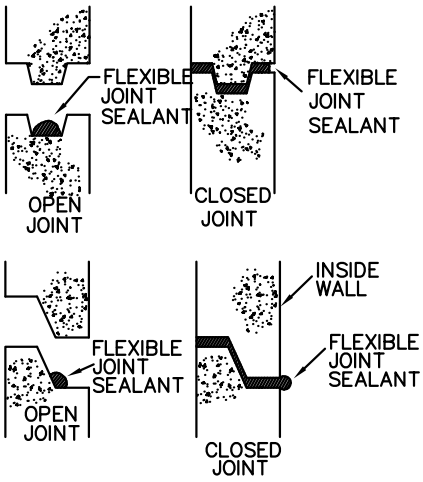

(STANDARD)

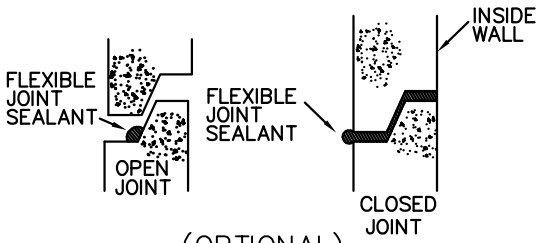

(OPTIONAL)

JOINT DETAILS

NOTES:
1– SEE DRAWING NO. 220 FOR JUNCTION AND DROP MANHOLE DETAILS AND MANHOLE SIZES.
2– PRECAST BASE MAY BE USED, FROM APPROVED SUPPLIERS.
3– IF OPTIONAL JOINT IS USED, ALL MANHOLE SECTIONS SHALL BE CLEARLY MARKED ON THE INSIDE AS TO THE MANUFACTURER AND TYPE OF JOINT BEING USED.

NO SCALE

WASHINGTON COUNTY PUBLIC WORKS DEPARTMENT

REVISIONS				
DATE	DESCRIPTION	BY	STANDARD MANHOLE DETAILS	STANDARD DWG. NO. 220 — 1 OF 1
				APPROVED:
				DATE: MAY 2009 — BY:

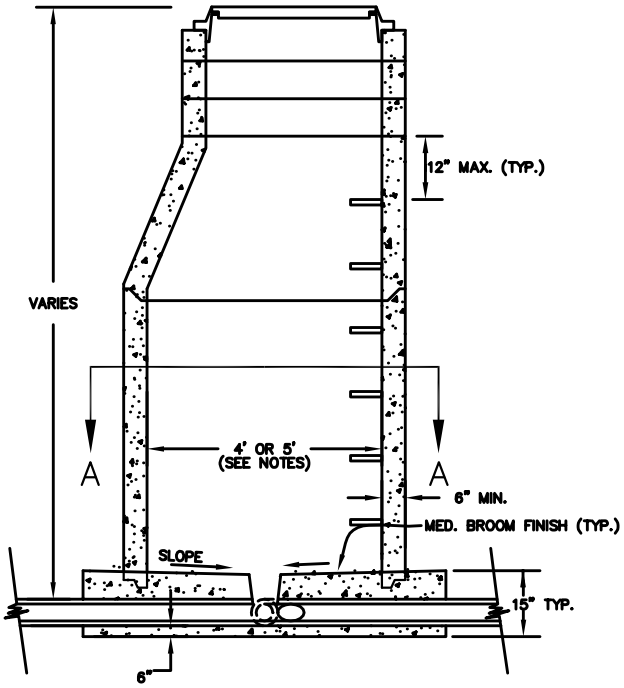

TYPICAL JUNCTION MANHOLE

(SECTION THRU CENTER)

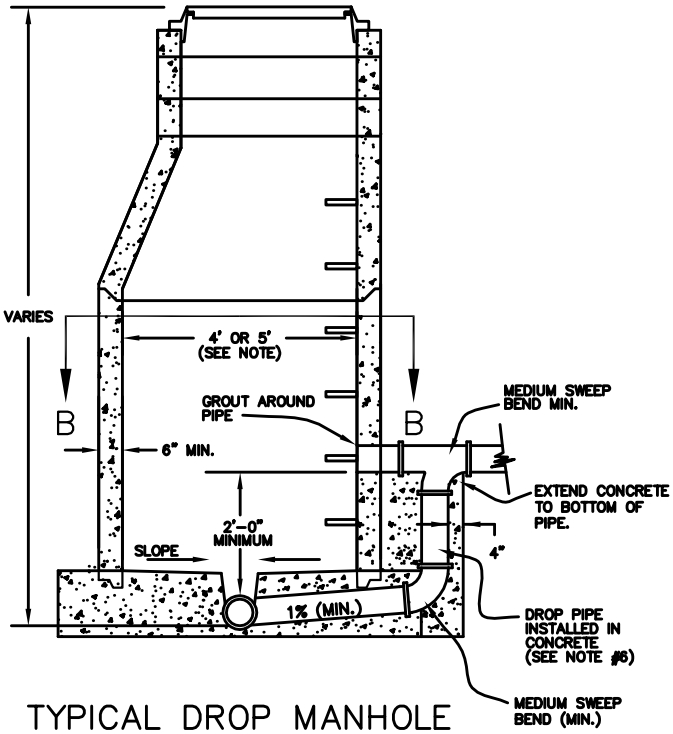

TYPICAL DROP MANHOLE

(SECTION THRU CENTER)

NOTES:

1– FOR SEWER PIPES LESS THAN 12–INCH DIAMETER USE 4–FOOT DIAMETER MANHOLE.
2– FOR SEWER PIPES WITH 12–INCH OR GREATER DIAMETER USE 5–FOOT DIAMETER MANHOLE.
3– WHEN THE SUM OF ALL PIPE SIZES CONNECTED TO THE MANHOLE TOTALS 24 INCHES OR GREATER USE A 5–FOOT DIAMETER MANHOLE.
4– WHEN SEWER DEPTH IS 12 FEET OR GREATER USE A 5–FOOT DIAMETER MANHOLE.
5– SEE DRAWING NO. 220 FOR ADDITIONAL DETAILS.
6– VERTICAL DROP PIPE AND FITTINGS SHALL BE THE SAME SIZE AS THE INCOMING SEWER PIPE.

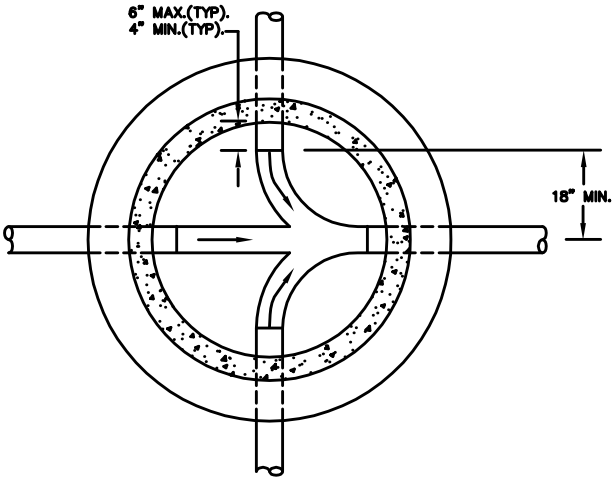

SECTION A–A

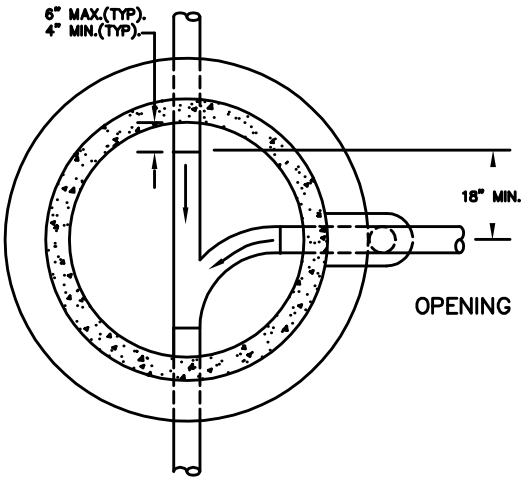

SECTION B–B

NO SCALE

WASHINGTON COUNTY PUBLIC WORKS DEPARTMENT

REVISIONS				
DATE	DESCRIPTION	BY	JUNCTION & DROP MANHOLE DETAILS	STANDARD DWG. NO. 221 — 1 OF 1
				APPROVED:
				DATE: MAY 2009 — BY:

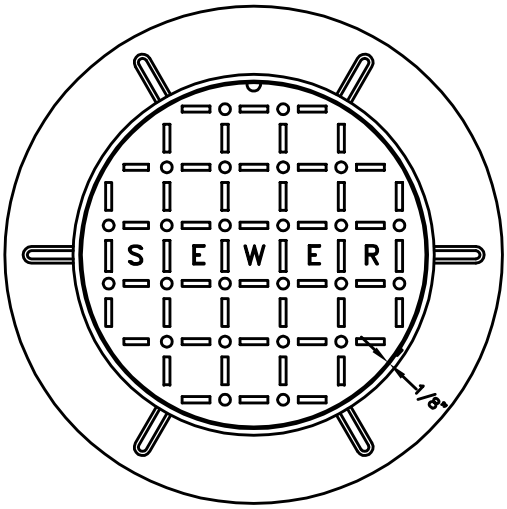

PLAN OF COVER & RING

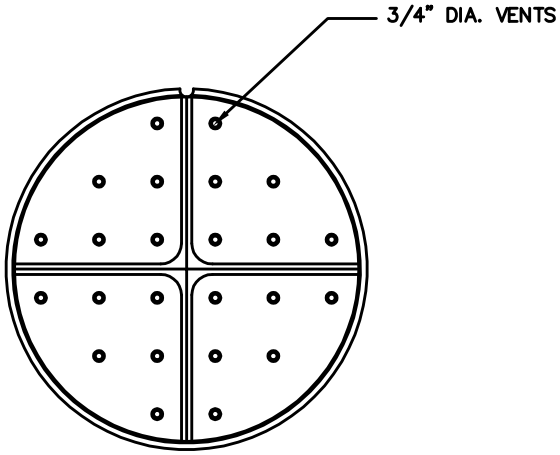

BOTTOM VIEW OF COVER

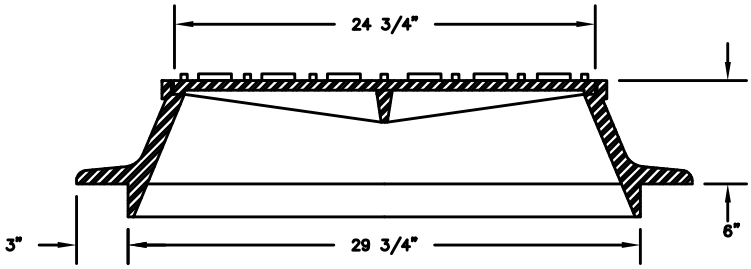

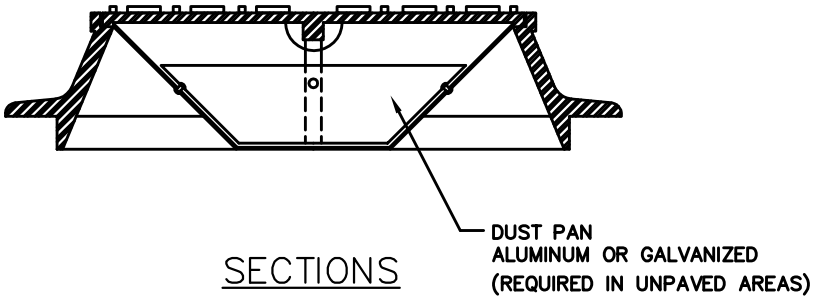

SECTIONS

WASHINGTON COUNTY PUBLIC WORKS DEPARTMENT					
REVISIONS			MANHOLE FRAME & COVER DETAILS	STANDARD DWG. NO.	
DATE	DESCRIPTION	BY		222	1 OF 1
				APPROVED:	
				DATE: MAY 2009	BY:

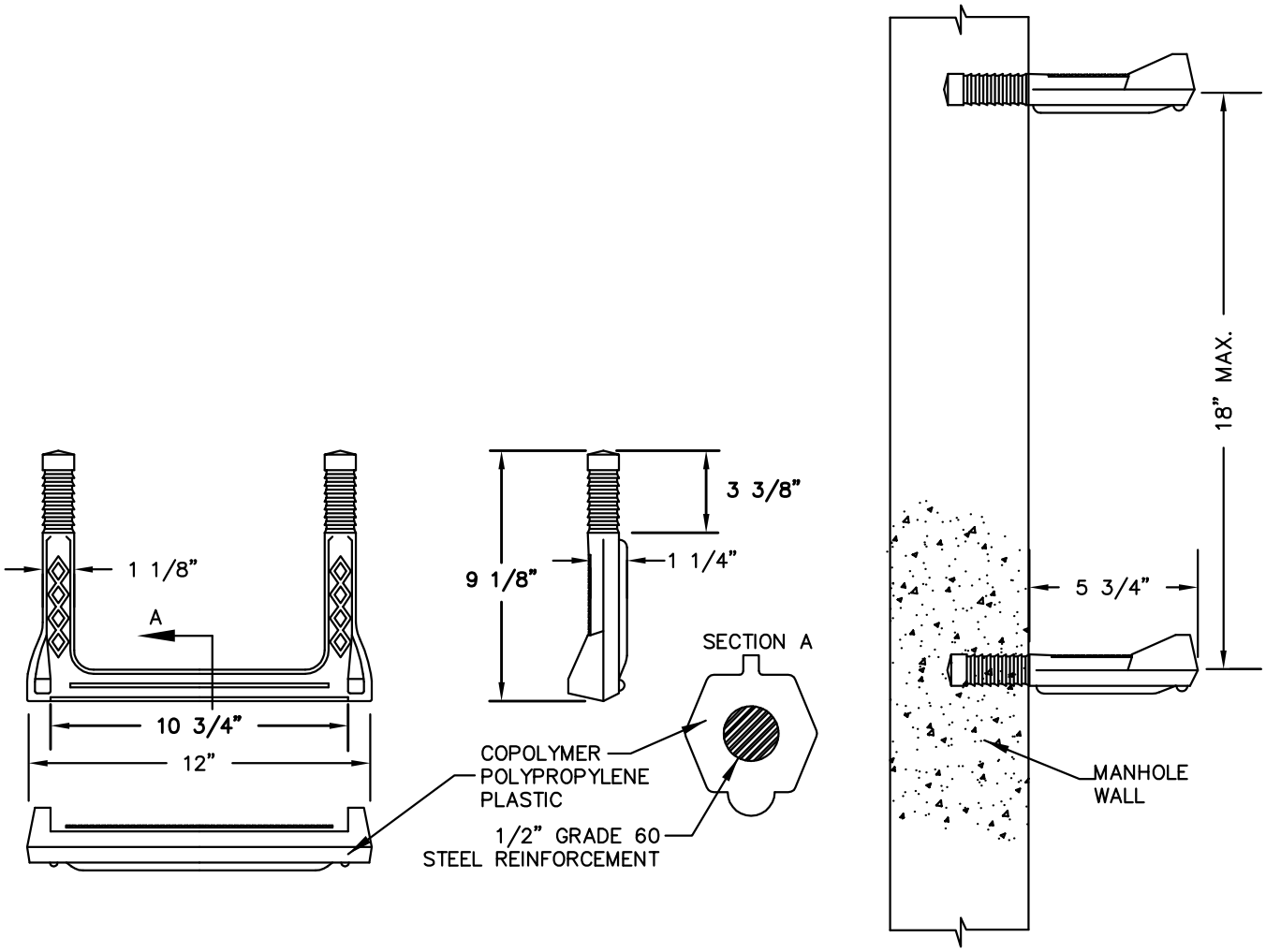

MANHOLE STEPS

NOTES:

1– INSTALL STEPS PER MANUFACTURERS RECOMMENDATIONS.

2– STEPS SHALL BE ALIGNED VERTICALLY.

WASHINGTON COUNTY PUBLIC WORKS DEPARTMENT

REVISIONS				
DATE	DESCRIPTION	BY	MANHOLE STEP DETAILS	STANDARD DWG. NO. 223 — 1 OF 1
				APPROVED:
				DATE: MAY 2009 BY:

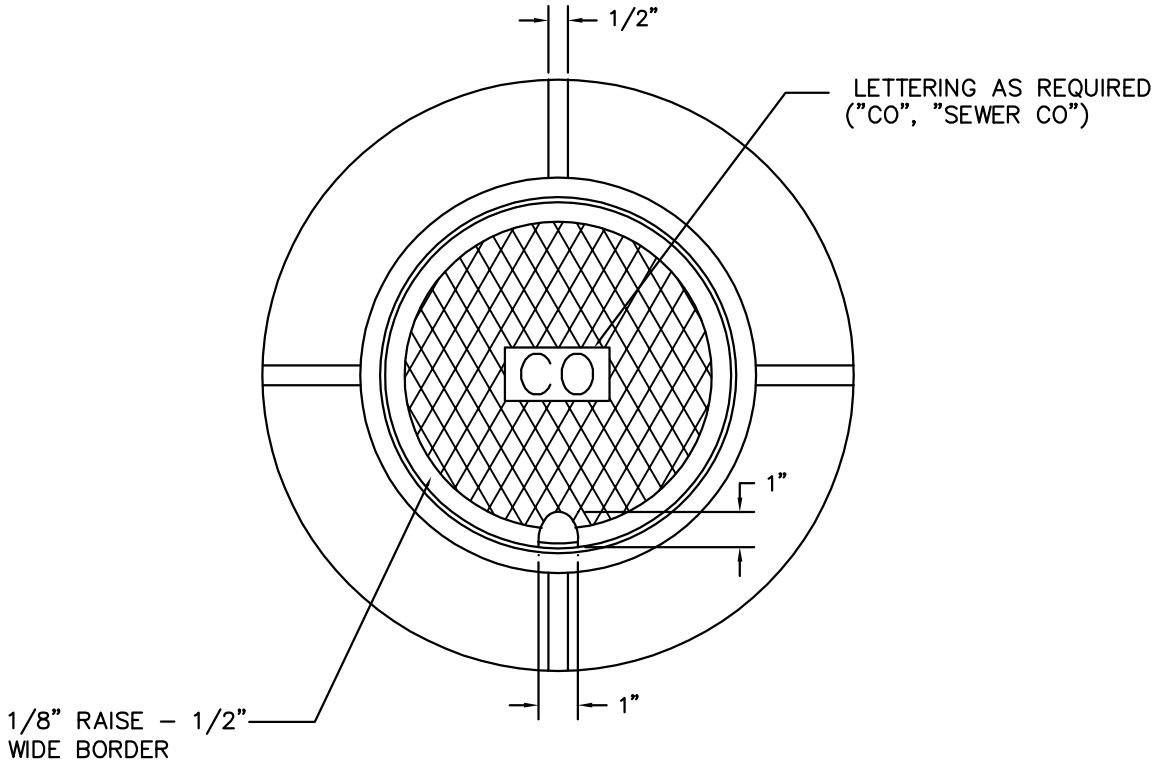

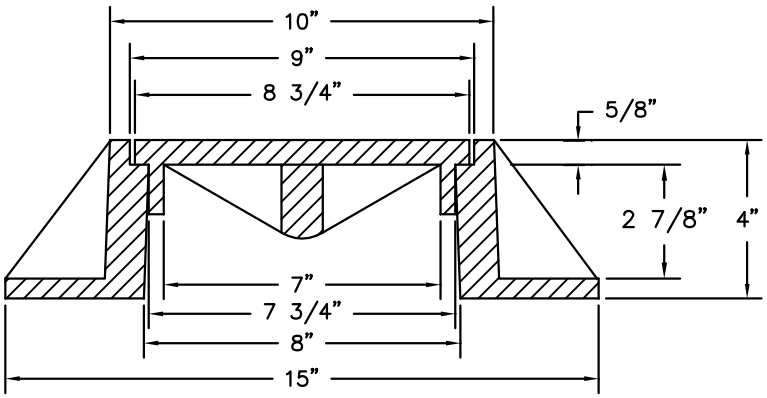

NOTES:

1– MATERIAL SHALL BE CAST IRON ASTM A48, CL30

WASHINGTON COUNTY PUBLIC WORKS DEPARTMENT					
REVISIONS			SEWER CLEANOUT COVER DETAIL	STANDARD DWG. NO.	
DATE	DESCRIPTION	BY		224	1 OF 1
				APPROVED:	
				DATE: MAY 2009	BY:

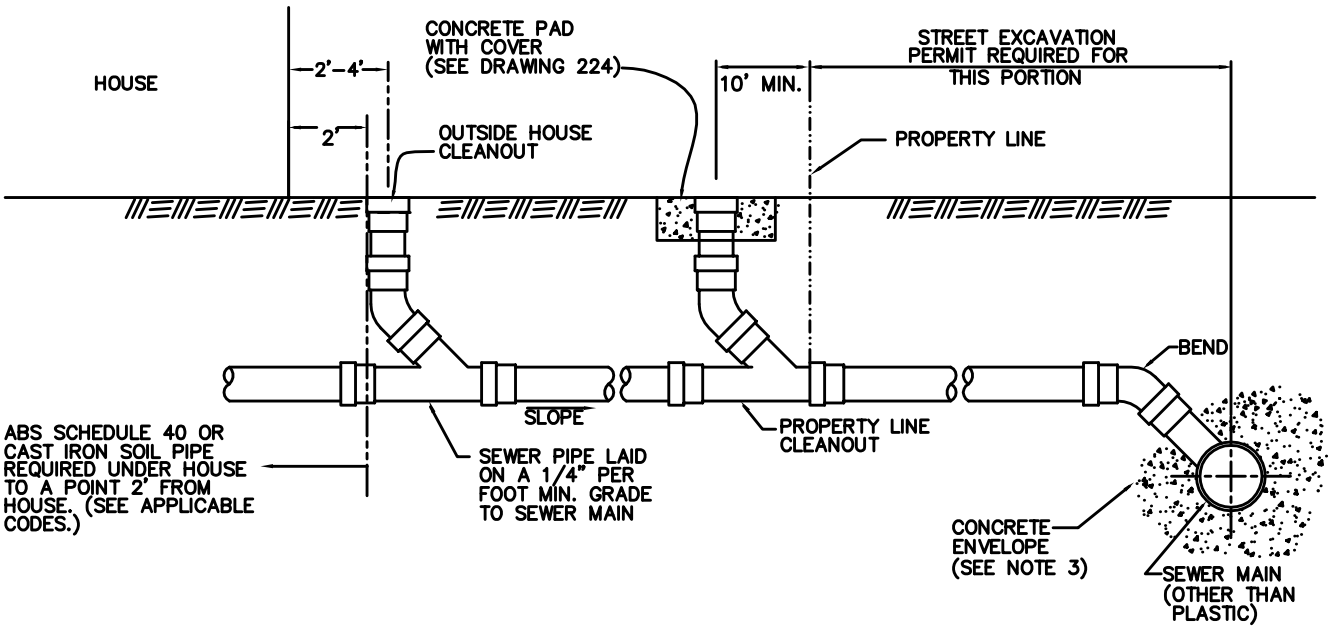

NOTES:
1– PROPERTY LINE AND OUTSIDE HOUSE CLEANOUTS ARE REQUIRED AS SHOWN.
2– CLEANOUT REQUIRED AT 100' MAX. SPACING (STRAIGHT RUNS) AND FOR EACH AGGREGATE CHANGE IN DIRECTION, WHERE TOTAL AGGREGATE CHANGE EXCEEDS 135 DEGREES.
3– ALL LATERALS CUT INTO EXISTING MAINS SHALL BE ADAPTED WITH SADDLES. WHERE SADDLES ARE NOT WATER TIGHT, A CONCRETE ENVELOPE SHALL BE REQUIRED. LATERALS SHALL NOT PROTRUDE INTO SEWER MAINS.
4– ALL CLEANOUTS SHALL HAVE A CAST IRON RING AND COVER WITH H–20 RATING OR OTHER APPROVED PROTECTIVE DEVICE.
5– FOR COMMERCIAL APPLICATION CONTACT WASTE WATER DEPARTMENT.

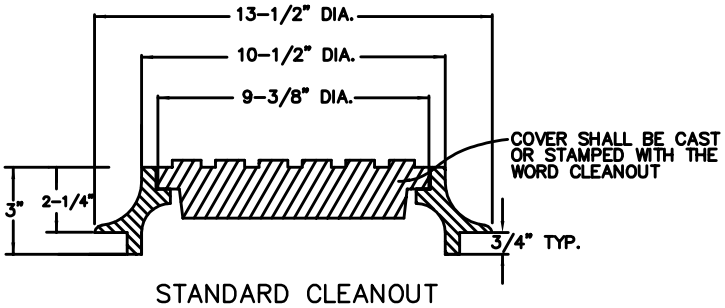

STANDARD CLEANOUT
RING & LID – FOR DRIVEWAYS
(H–20 RATING)

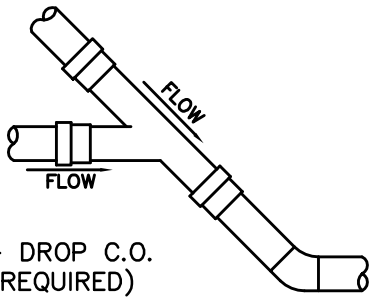

DETAIL – DROP C.O.
(WHERE REQUIRED)

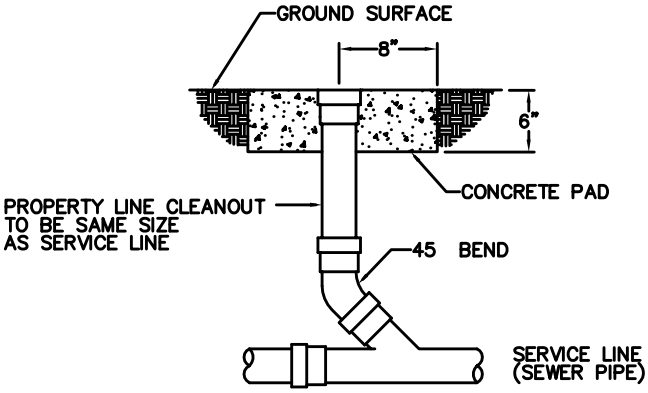

CLEANOUT DETAIL B

WASHINGTON COUNTY PUBLIC WORKS DEPARTMENT					
REVISIONS			TYPICAL RESIDENTIAL SEWER CONNECTION DETAILS	STANDARD DWG. NO.	
DATE	DESCRIPTION	BY		230	1 OF 1
				APPROVED:	
				DATE: MAY 2009	BY:

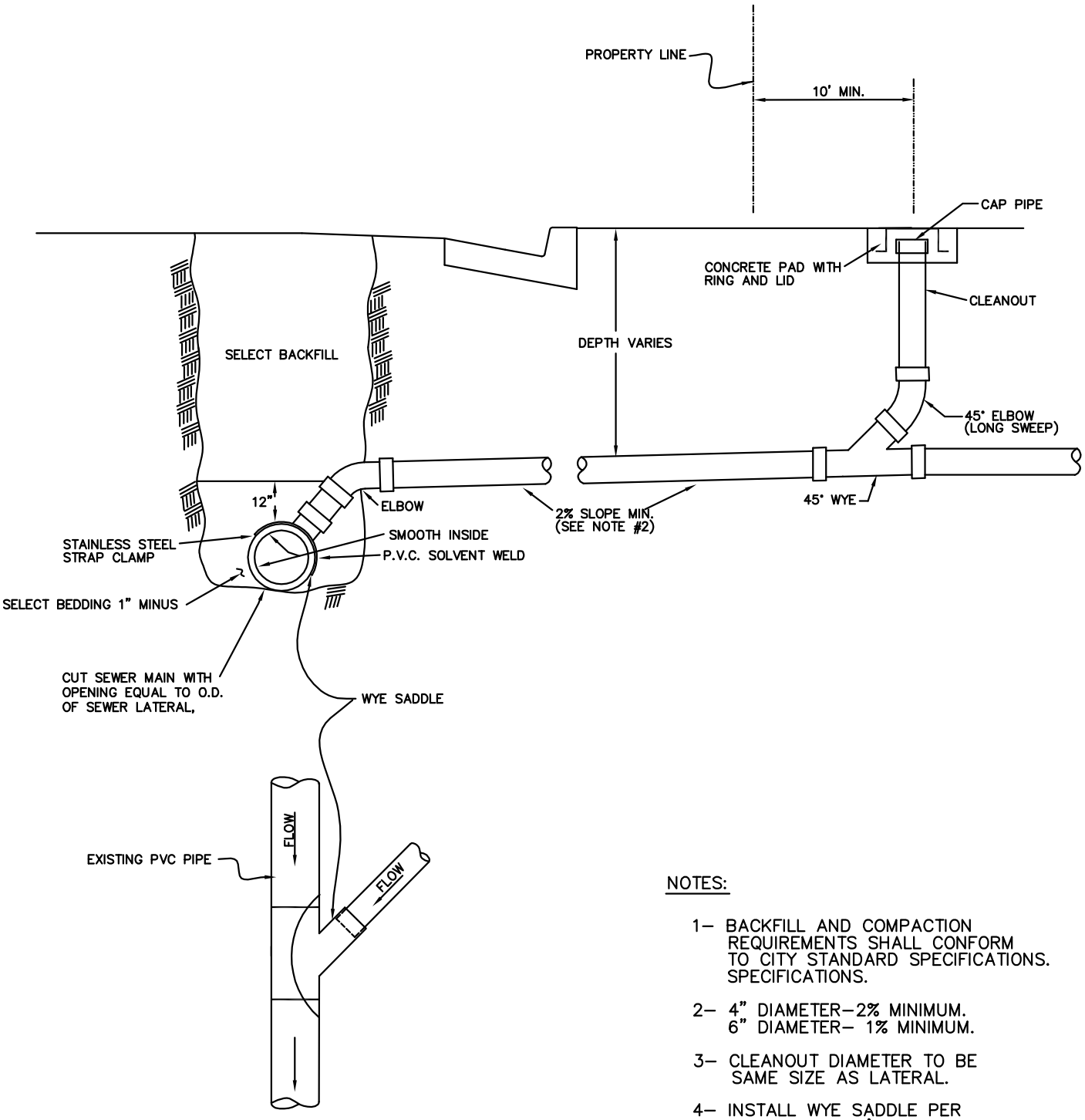

NOTES:

1– BACKFILL AND COMPACTION REQUIREMENTS SHALL CONFORM TO CITY STANDARD SPECIFICATIONS. SPECIFICATIONS.

2– 4" DIAMETER–2% MINIMUM.
6" DIAMETER– 1% MINIMUM.

3– CLEANOUT DIAMETER TO BE SAME SIZE AS LATERAL.

4– INSTALL WYE SADDLE PER MANUFACTURER'S RECOMMENDATIONS.

WASHINGTON COUNTY PUBLIC WORKS DEPARTMENT

REVISIONS				
DATE	DESCRIPTION	BY	P.V.C. SERVICE CONNECTION EXISTING P.V.C. SEWER MAINS	STANDARD DWG. NO. 231 — 1 OF 1
				APPROVED:
				DATE: MAY 2009 — BY:

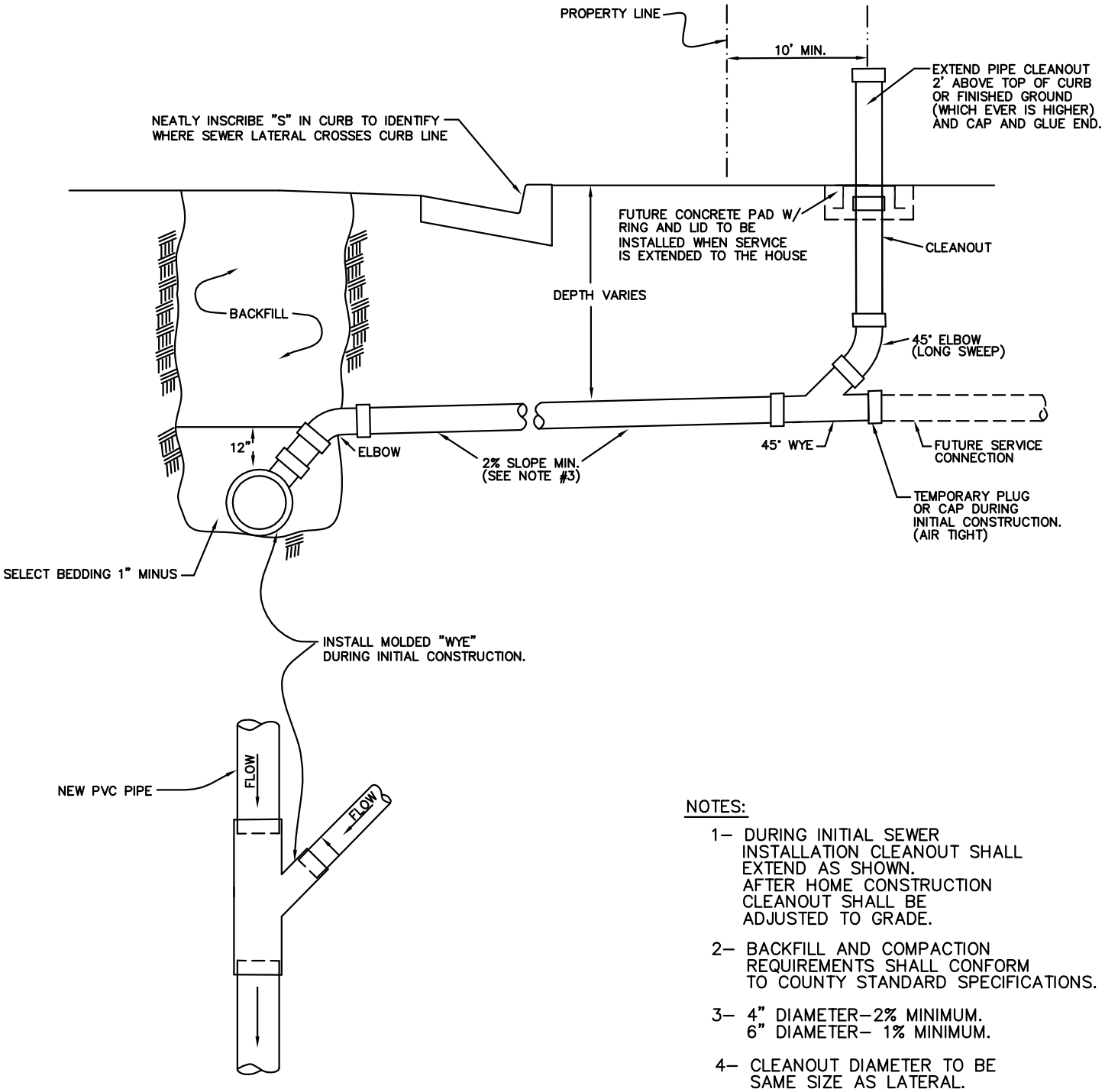

NOTES:

1– DURING INITIAL SEWER INSTALLATION CLEANOUT SHALL EXTEND AS SHOWN. AFTER HOME CONSTRUCTION CLEANOUT SHALL BE ADJUSTED TO GRADE.

2– BACKFILL AND COMPACTION REQUIREMENTS SHALL CONFORM TO COUNTY STANDARD SPECIFICATIONS.

3– 4" DIAMETER–2% MINIMUM.
6" DIAMETER– 1% MINIMUM.

4– CLEANOUT DIAMETER TO BE SAME SIZE AS LATERAL.

5– BRASS PLUG MARKED WITH "S" PLACED IN TOP OF CURB MAY BE USED IN LIEU OF INSCRIBED "S" IN FACE.

WASHINGTON COUNTY PUBLIC WORKS DEPARTMENT

REVISIONS				
DATE	DESCRIPTION	BY	P.V.C. SERVICE CONNECTION NEW P.V.C. SEWER MAINS	STANDARD DWG. NO. 232 — 1 OF 1
				APPROVED:
				DATE: MAY 2009 — BY:

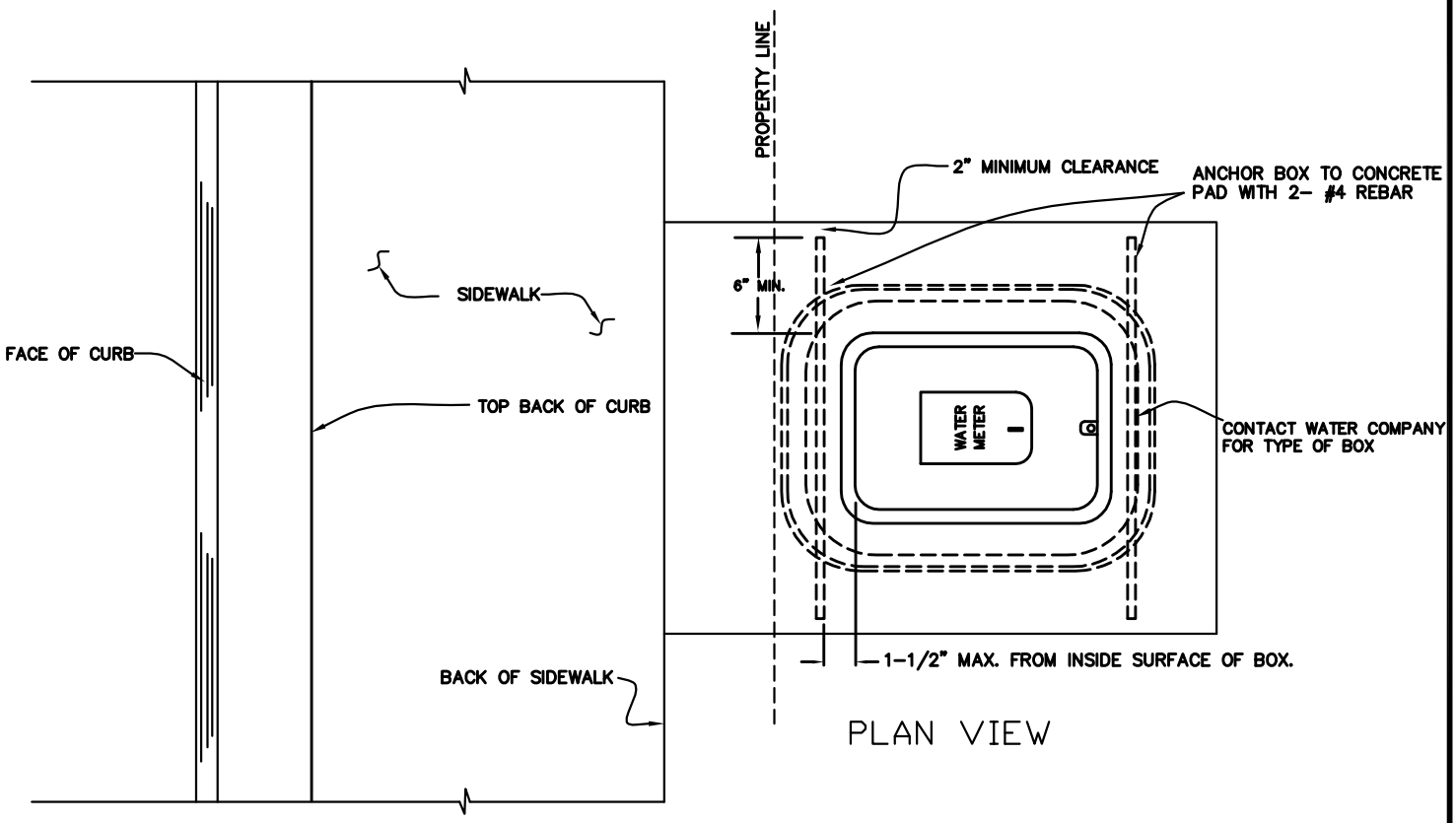

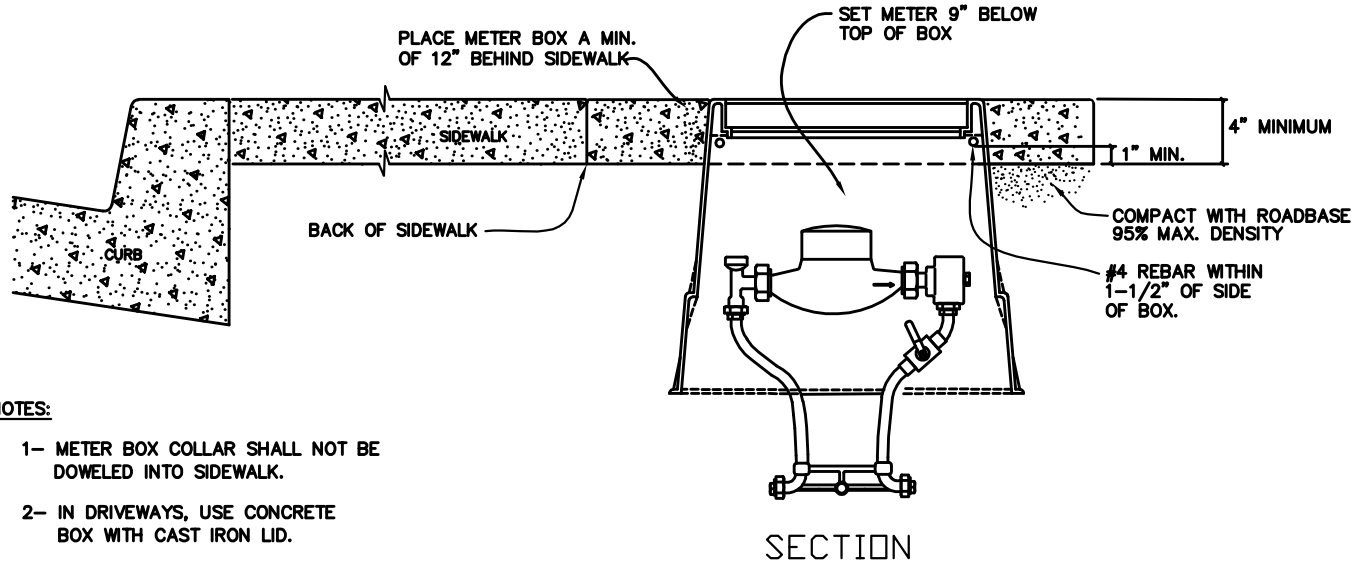

NOTES:

1- METER BOX COLLAR SHALL NOT BE DOWELED INTO SIDEWALK.

2- IN DRIVEWAYS, USE CONCRETE BOX WITH CAST IRON LID.

WASHINGTON COUNTY PUBLIC WORKS DEPARTMENT

REVISIONS				
DATE	DESCRIPTION	BY	WATER METER BOX DETAILS	STANDARD DWG. NO. 300 1 OF 1
				APPROVED:
				DATE: MAY 2009 BY:

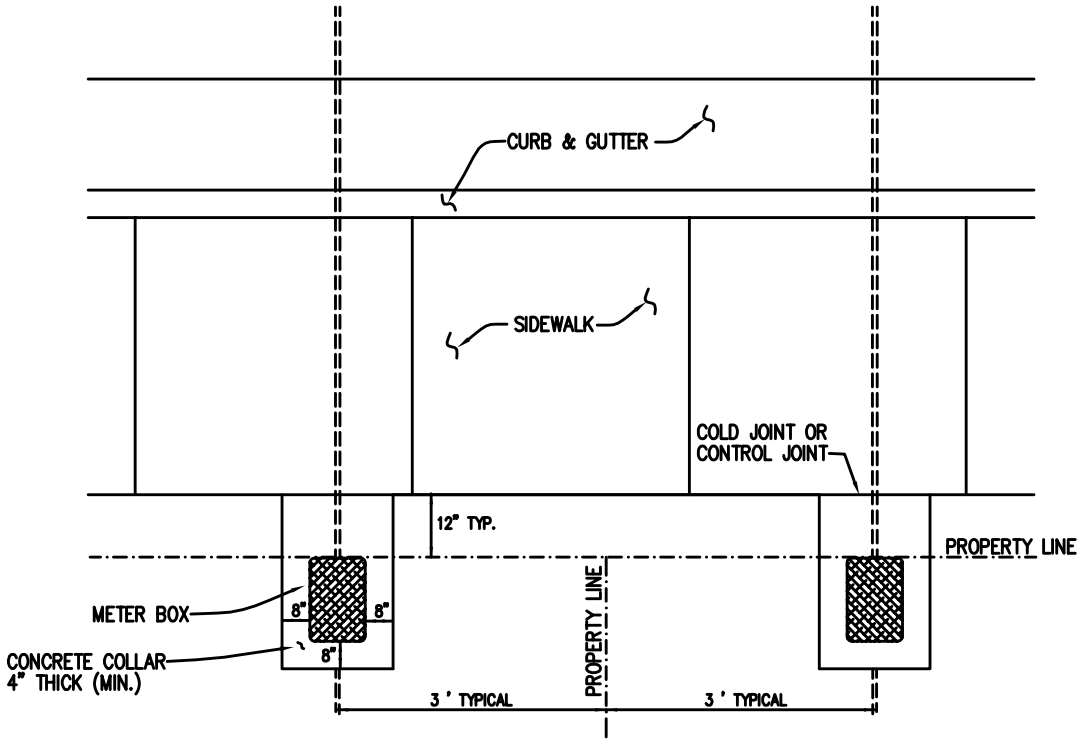

PLAN VIEW W/ SIDEWALKS
TYPICAL DUAL METER SERVICES

NOTES:

1- DO NOT DOWEL METER BOX COLLAR INTO SIDEWALK.

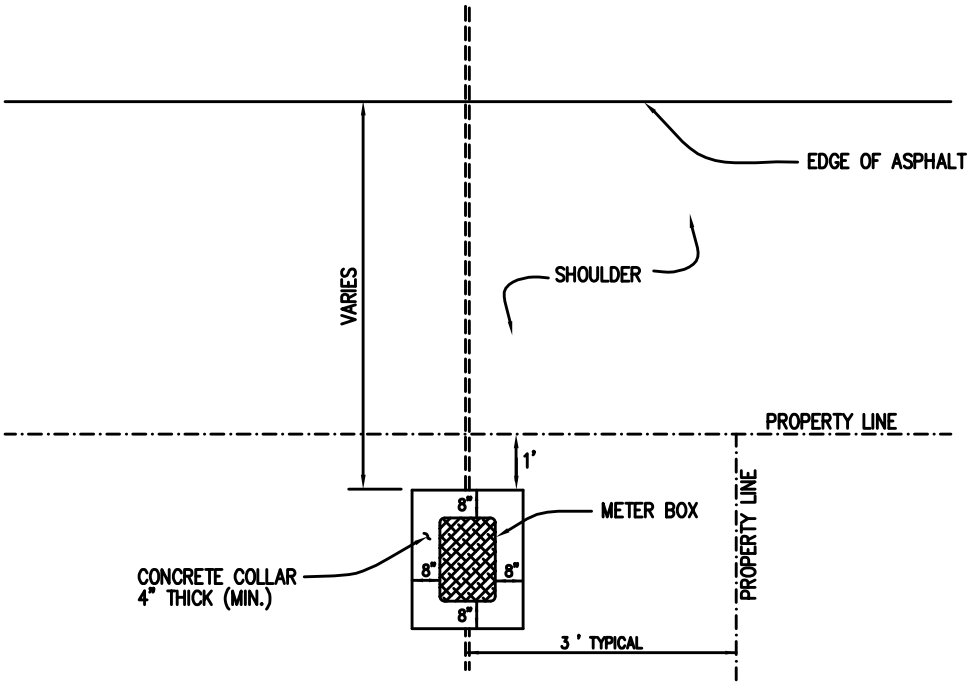

PLAN VIEW WITHOUT SIDEWALKS
TYPICAL SINGLE SERVICE

WASHINGTON COUNTY PUBLIC WORKS DEPARTMENT

REVISIONS				
DATE	DESCRIPTION	BY	WATER METER BOX LOCATION DETAILS	STANDARD DWG. NO. 301 — 1 OF 1
				APPROVED:
				DATE: MAY 2009 — BY:

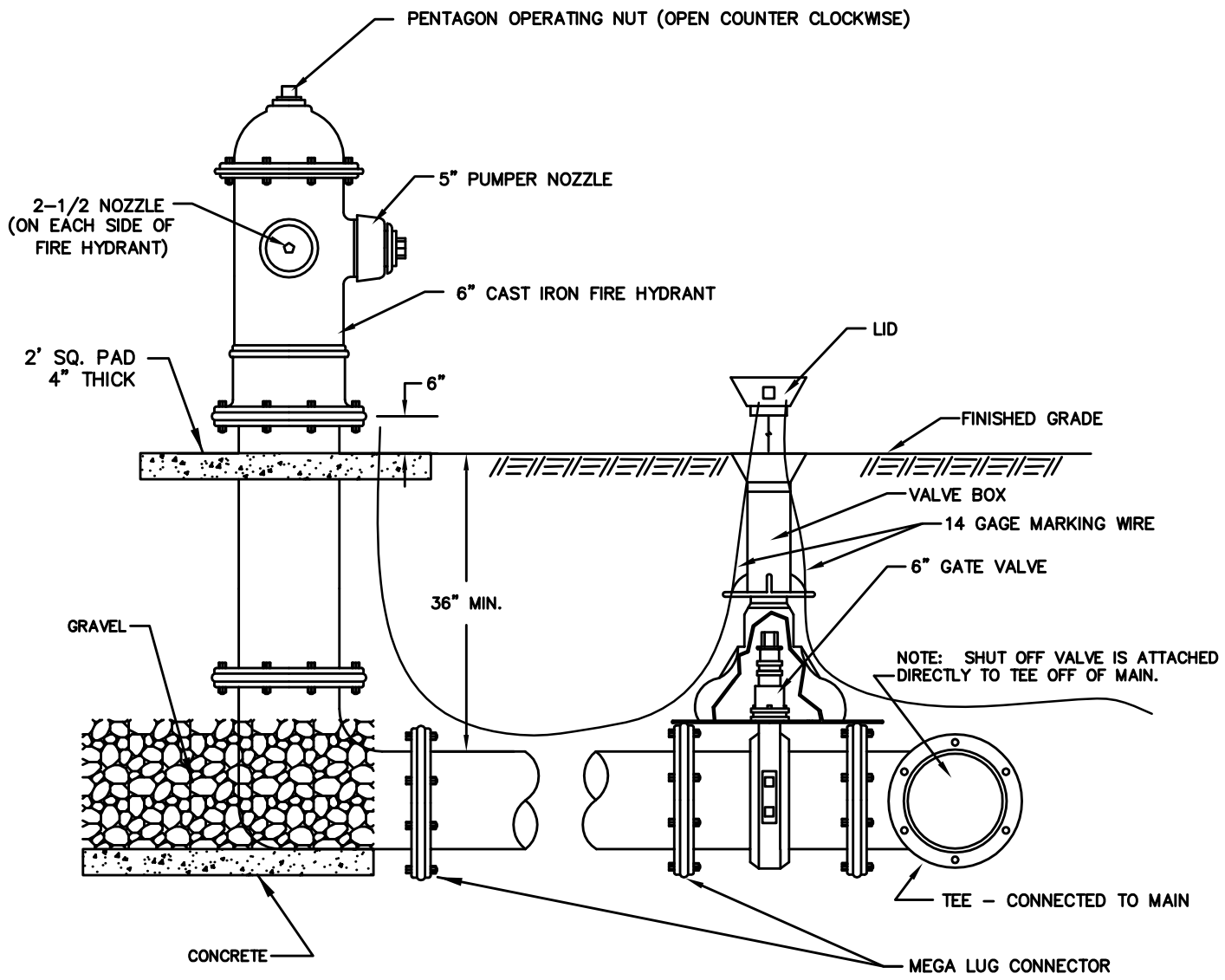

NOTES:

1- IN GENERAL, NO PART OF THE FIRE HYDRANT SHALL BE PLACED WITHIN 12" OF THE BACK OF THE SIDEWALK.

2- INSTALL TRACER WIRE FROM SHUT-OFF VALVE TO HYDRANT

WASHINGTON COUNTY PUBLIC WORKS DEPARTMENT					
REVISIONS			STANDARD FIRE HYDRANT DETAILS	STANDARD DWG. NO.	
DATE	DESCRIPTION	BY		302	1 OF 1
				APPROVED:	
				DATE: MAY 2009	BY:

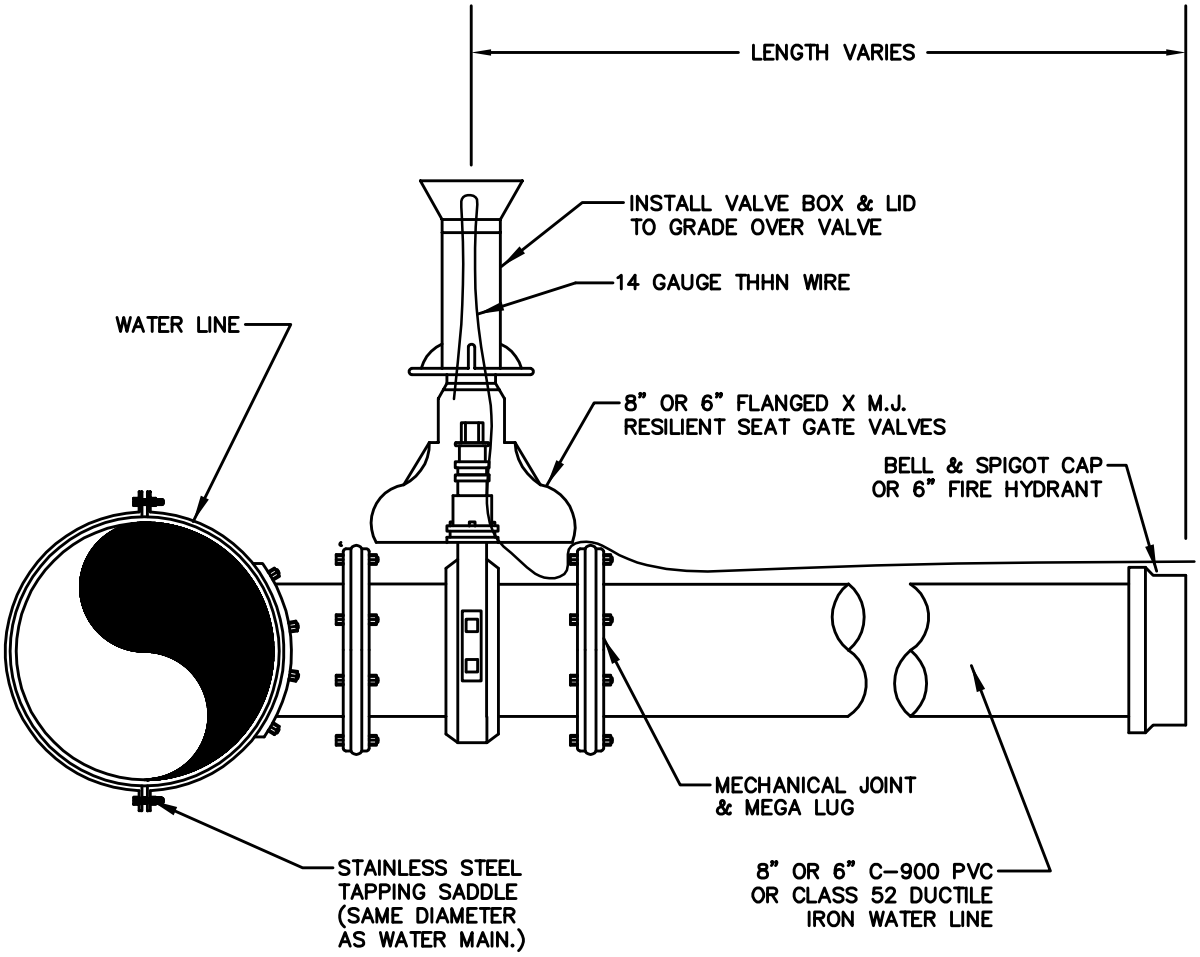

WASHINGTON COUNTY PUBLIC WORKS DEPARTMENT

REVISIONS				
DATE	DESCRIPTION	BY	8" OR 6" WATER LATERAL (CONNECTION TO EXISTING LINE)	STANDARD DWG. NO. 304 — 1 OF 1
				APPROVED:
				DATE: MAY 2009 — BY:

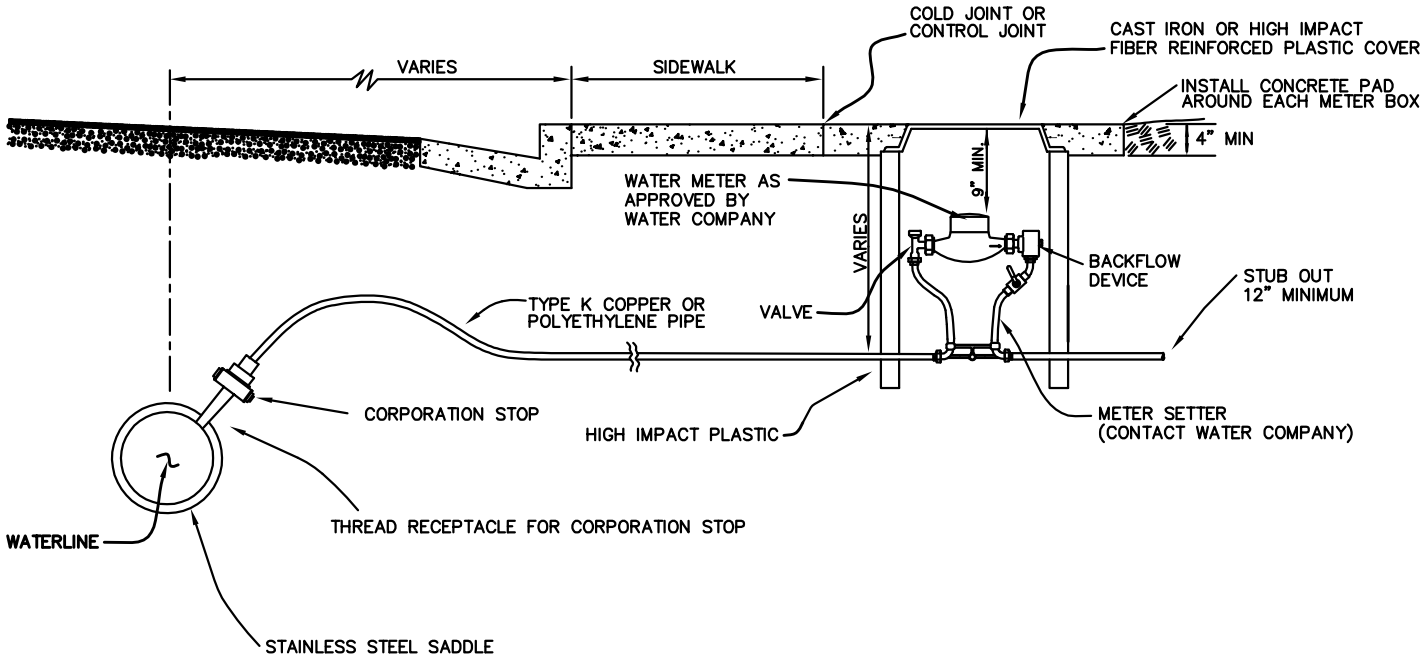

NOTES:
1– ALL TRENCH EXCAVATION AND COMPACTION SHALL BE IN ACCORDANCE WITH STANDARD SPECIFICATIONS.

WASHINGTON COUNTY PUBLIC WORKS DEPARTMENT

REVISIONS				
DATE	DESCRIPTION	BY	TYPICAL WATER SERVICE CONNECTION & METER	STANDARD DWG. NO. 305 — 1 OF 1
				APPROVED:
				DATE: MAY 2009 — BY:

THRUST BLOCK BEARING AREA IN SQUARE FEET								
PIPE SIZE	CONDITION							
	I	II	III	IV	V	VI	VII	VII
4"	2.6	3.3	2.6	1.3	1.3	2.0	3.3	2.6
6"	4.6	6.5	3.9	2.0	2.6	3.3	6.5	4.6
8"	7.8	11.0	5.9	3.3	3.9	5.9	11.0	7.8
10"	12.4	17.5	9.8	5.2	6.5	9.1	17.5	12.4
12"	17.5	24.8	13.6	7.8	9.1	12.3	24.8	17.5
14"	24.0	33.8	18.2	9.7	12.3	16.9	33.8	24.0
16"	31.1	44.0	23.8	12.7	15.5	23.2	44.0	31.1

1. CALCULATED ON 225 LB. TEST PRESSURE & ALLOWABLE BEARING PRESSURE OF 2000 LBS. PER SQUARE FOOT.
2. IN POOR SOILS SPECIAL DESIGN IS REQUIRED.
3. CONCRETE SHALL BE CLASS "C" OR BETTER.
4. ALL THRUST BLOCK BEARING FACES SHALL BE POURED AGAINST UNDISTURBED SOIL OR APPROVED COMPACTED BACKFILL.
5. PRIOR APPROVAL FROM THE WATER COMPANY REQUIRED FOR USE OF CONCRETE THRUST BLOCKS.

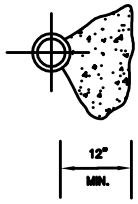

TYPICAL SECTION THRU THRUST BLOCKS

VALVE ANCHOR REQUIRED FOR VALVES 12" OR LARGER

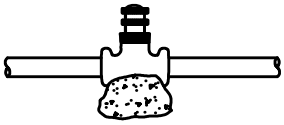

THRUST BLOCKING

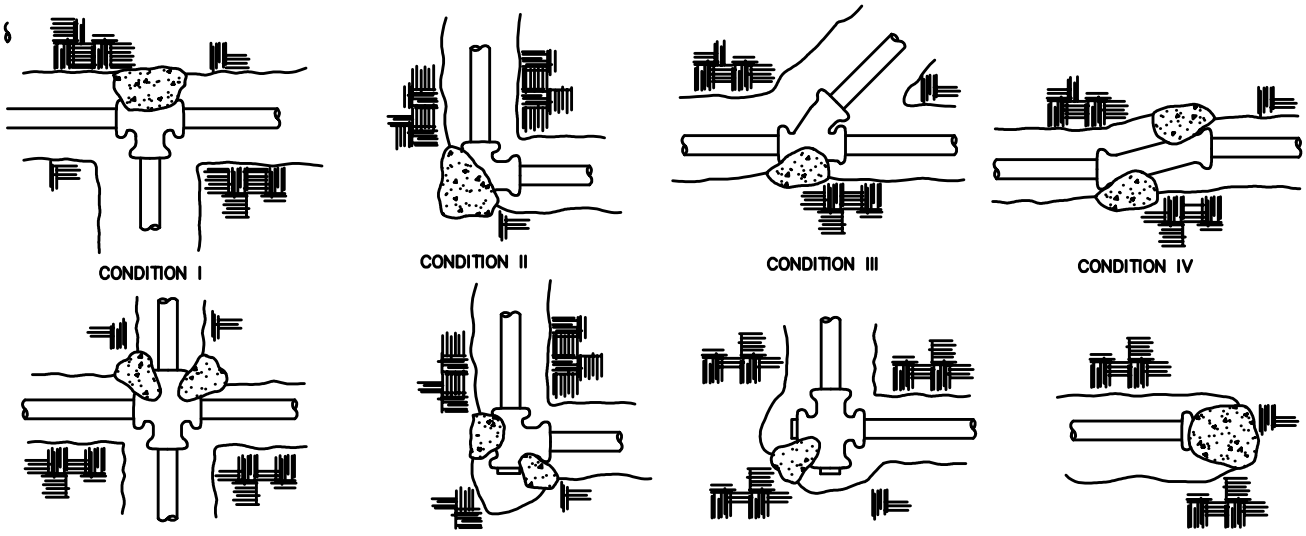

WASHINGTON COUNTY PUBLIC WORKS DEPARTMENT

REVISIONS				
DATE	DESCRIPTION	BY	WATER LINE THRUST BLOCK DETAILS	STANDARD DWG. NO. 306 — 1 OF 1
				APPROVED:
				DATE: MAY 2009 BY:

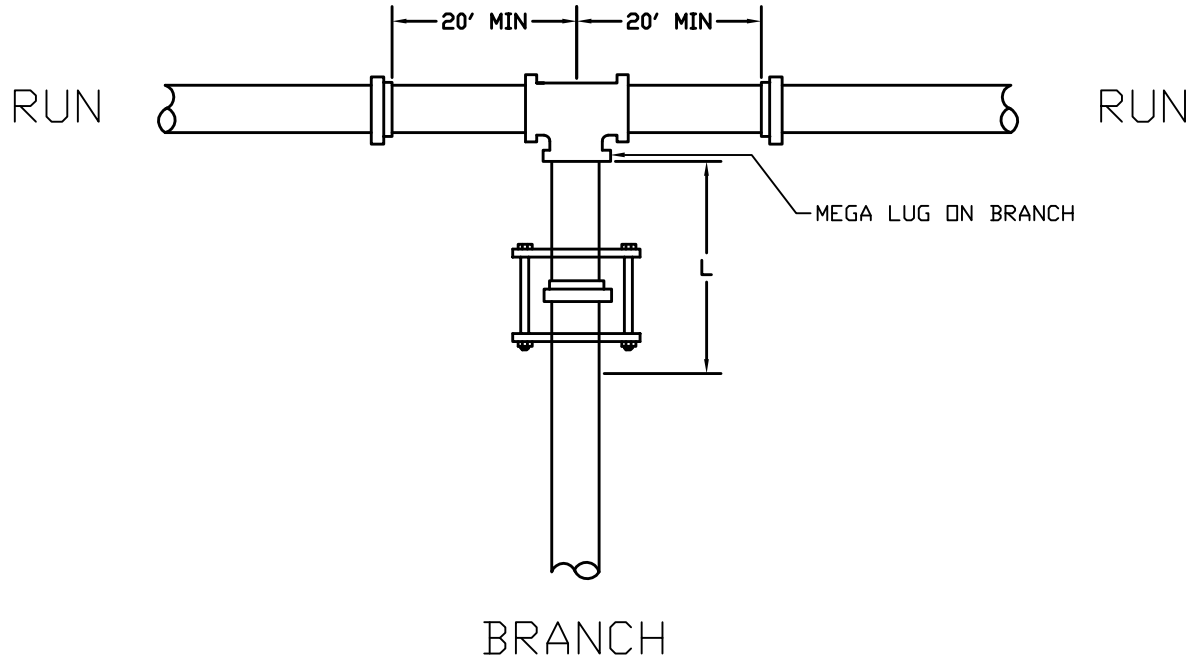

RUN SIZE DIAMETER

BRANCH SIZE DIAMETER	4	6	8	10	12	14	16	18	20	24
4	*	*	*	*	*	*	*	*	*	*
6		*	*	*	*	*	*	*	*	*
8			*	*	*	*	*	*	*	*
10				10	*	*	*	*	*	*
12					28	12	4	*	*	*
14						45	31	17	3	*
16							62	49	37	11
18								78	67	44
20									95	74
24										127

* - FOR THIS CONDITION NEED ONLY RESTRAIN THE BRANCH OUTLET OF THE TEE.

RESTRAINED LENGTHS, "L" (IN FEET)

1. RESTRAIN THE TWO MECHANICAL JOINTS ON THE RUN SIDES OF THE TEE. THERE SHOULD BE A FULL 20' LENGTH OF PIPE INSTALLED ON EACH SIDE OF THE RUN.
2. ALL JOINTS WITHIN THE LENGTH "L" ON THE BRANCH MUST BE RESTRAINED. USE RETAINER GLAND AT MECHANICAL JOINTS AND HARNESS ON PUSH-ON PIPE PER COUNTY SPECIFICATION.
3. FOR TEST PRESSURES AND LAYING CONDITIONS SEE SECTION ON GENERAL NOTES FOR USE OF RESTRAINED JOINT LENGTHS.

WASHINGTON COUNTY PUBLIC WORKS DEPARTMENT

REVISIONS				STANDARD DWG. NO.	
DATE	DESCRIPTION	BY	STANDARD TEE PVC RESTRAINING SYSTEM DETAIL	307	1 OF 1
				APPROVED:	
				DATE: MAY 2009	BY:

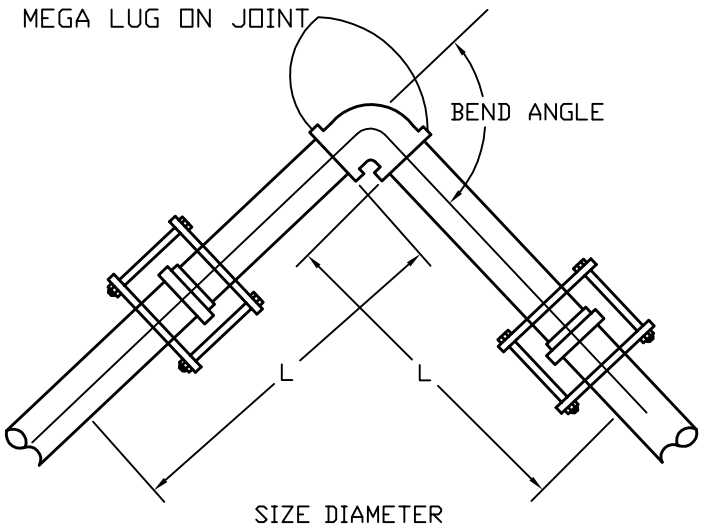

HORIZONTAL BEND

1. ALL JOINTS WITHIN LENGTH "L" MUST BE RESTRAINED. USE RETAINER GLAND AT MECHANICAL JOINTS AND HARNESS WITH PUSH-ON PIPE PER COUNTY SPECIFICATION.
2. FOR TEST PRESSURES AND LAYING CONDITIONS SEE SECTION ON GENERAL NOTES FOR USE OF RESTRAINED JOINT LENGTHS.

SIZE DIAMETER

BEND ANGLE	4	6	8	10	12	14	16	18	20
11.25	2	3	4	4	5	6	7	7	8
22.5	4	6	7	9	10	12	13	15	16
45	8	12	15	18	21	24	28	30	33
90	20	28	37	44	52	59	67	73	81

RESTRAINED LENGTHS, "L" (IN FEET)

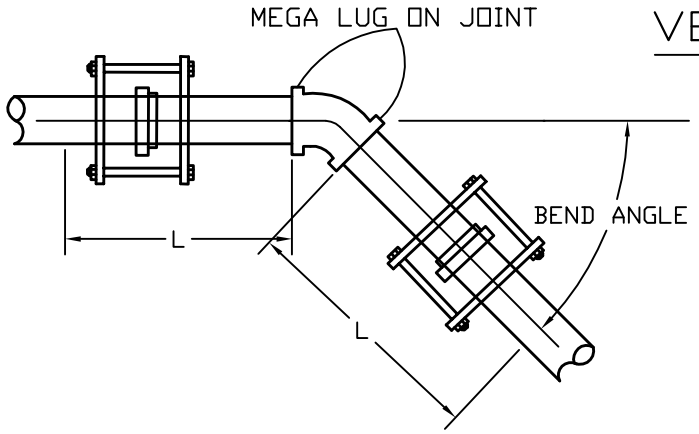

VERTICAL DOWN BEND

1. ALL JOINTS WITHIN LENGTH "L" MUST BE RESTRAINED. USE RETAINER GLAND AT MECHANICAL JOINTS AND HARNESS WITH PUSH-ON PIPE PER COUNTY SPECIFICATION.
2. FOR TEST PRESSURES AND LAYING CONDITIONS SEE SECTION ON GENERAL NOTES FOR USE OF RESTRAINED JOINT LENGTHS.

SIZE DIAMETER

BEND ANGLE	4	6	8	10	12	14	16	18	20
11.25	6	8	10	12	14	15	17	20	20
22.5	11	15	19	23	27	31	35	40	40
45	23	31	40	48	56	64	72	80	80

RESTRAINED LENGTHS, "L" (IN FEET)

WASHINGTON COUNTY PUBLIC WORKS DEPARTMENT

REVISIONS				
DATE	DESCRIPTION	BY	STANDARD BENDS FOR PVC RESTRAINING SYSTEM DETAIL	STANDARD DWG. NO. 308 — 1 OF 1
				APPROVED:
				DATE: MAY 2009 — BY:

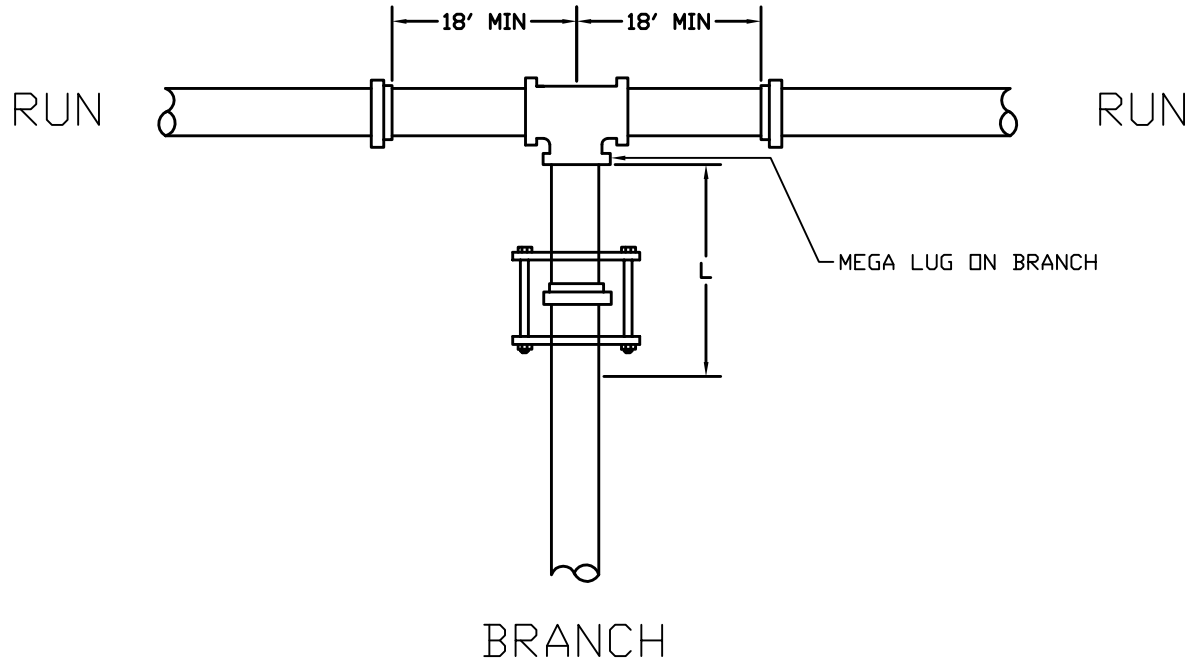

RUN SIZE DIAMETER

BRANCH SIZE DIAMETER	4	6	8	10	12	14	16	18	20	24
4	*	*	*	*	*	*	*	*	*	*
6		*	*	*	*	*	*	*	*	*
8			*	*	*	*	*	*	*	*
10				10	2	*	*	*	*	*
12					19	12	4	*	*	*
14						28	22	15	8	*
16							37	31	26	13
18								46	41	30
20									55	45
24										72

* - FOR THIS CONDITION NEED ONLY RESTRAIN THE BRANCH OUTLET OF THE TEE.

RESTRAINED LENGTHS, "L" (IN FEET)

1. RESTRAIN THE TWO MECHANICAL JOINTS ON THE RUN SIDES OF THE TEE. THERE SHOULD BE A FULL 18' LENGTH OF PIPE INSTALLED ON EACH SIDE OF THE RUN.
2. ALL JOINTS WITHIN THE LENGTH "L" ON THE BRANCH MUST BE RESTRAINED. USE RETAINER GLAND AT MECHANICAL JOINTS AND HARNESS ON PUSH-ON PIPE PER COUNTY SPECIFICATION.
3. FOR TEST PRESSURES AND LAYING CONDITIONS SEE SECTION ON GENERAL NOTES FOR USE OF RESTRAINED JOINT LENGTHS.

WASHINGTON COUNTY PUBLIC WORKS DEPARTMENT

REVISIONS				STANDARD DWG. NO.	
DATE	DESCRIPTION	BY	STANDARD TEE DUCTILE IRON RESTRAINING SYSTEM DETAIL	309	1 OF 1
				APPROVED:	
				DATE: MAY 2009	BY:

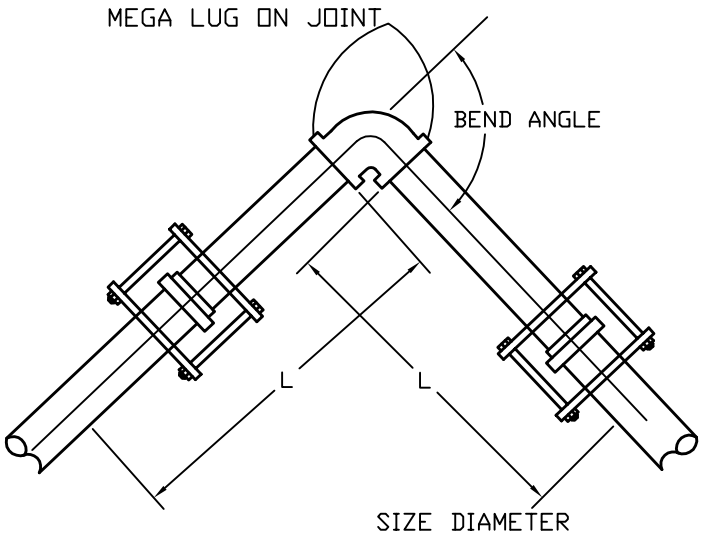

HORIZONTAL BEND

1. ALL JOINTS WITHIN LENGTH "L" MUST BE RESTRAINED. USE RETAINER GLAND AT MECHANICAL JOINTS AND HARNESS WITH PUSH-ON PIPE PER COUNTY SPECIFICATION.
2. FOR TEST PRESSURES AND LAYING CONDITIONS SEE SECTION ON GENERAL NOTES FOR USE OF RESTRAINED JOINT LENGTHS.

SIZE DIAMETER

BEND ANGLE	4	6	8	10	12	14	16	20
11.25	3	2	3	3	4	4	5	6
22.5	3	4	7	7	8	9	10	12
45	6	9	12	14	16	19	21	26
90	15	21	28	34	40	45	51	62

RESTRAINED LENGTHS, "L" (IN FEET)

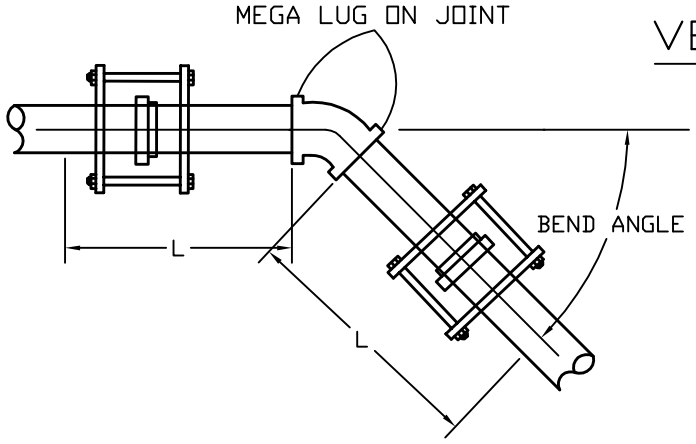

VERTICAL DOWN BEND

1. ALL JOINTS WITHIN LENGTH "L" MUST BE RESTRAINED. USE RETAINER GLAND AT MECHANICAL JOINTS AND HARNESS WITH PUSH-ON PIPE PER COUNTY SPECIFICATION.
2. FOR TEST PRESSURES AND LAYING CONDITIONS SEE SECTION ON GENERAL NOTES FOR USE OF RESTRAINED JOINT LENGTHS.

SIZE DIAMETER

BEND ANGLE	4	6	8	10	12	14	16	20
11.25	3	5	7	8	8	10	11	13
22.5	6	10	11	14	16	18	22	25
45	14	18	24	28	33	38	43	53

RESTRAINED LENGTHS, "L" (IN FEET)

WASHINGTON COUNTY PUBLIC WORKS DEPARTMENT

REVISIONS		
DATE	DESCRIPTION	BY

STANDARD BENDS FOR DUCTILE IRON RESTRAINING SYSTEM DETAIL

STANDARD DWG. NO.	
310	1 OF 1
APPROVED:	
DATE: MAY 2009	BY:

STANDARD DEAD END FOR DUCTILE IRON

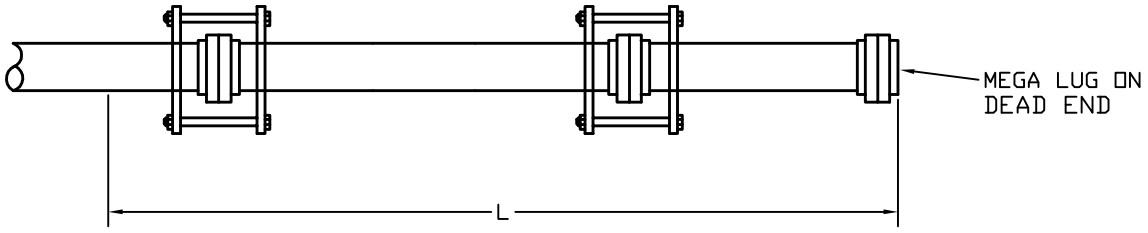

1. ALL JOINTS WITHIN LENGTH "L" MUST BE RESTRAINED. USE RETAINER GLAND AT MECHANICAL JOINTS AND HARNESS WITH PUSH-ON PIPE PER COUNTY SPECIFICATION.

2. FOR TEST PRESSURES AND LAYING CONDITIONS SEE SECTION ON GENERAL NOTES FOR USE OF RESTRAINED JOINT LENGTHS.

PIPE SIZE IN INCHES

4	6	8	10	12	14	16	18	20
23	33	45	52	62	71	80	89	98

RESTRAINED LENGTHS, "L" (IN FEET)

RESTRAINED JOINT LENGTHS USAGE GENERAL NOTES

RESTRAINED LENGTH CALCULATIONS ARE BASED ON THE FOLLOWING DESIGN TYPICALLY USED WITH BACKFILL IN WASHINGTON COUNTY.

1. THREE (3) FEET MINIMUM DEPTH OF COVER.
2. A SAFTEY FACTOR OF 1.5
3. SOIL TYPE SANDY CLAY
4. TYPE 5 TRENCH COMPACTION FROM FOUR (4) INCHES MINIMUM UNDER THE PIPE TO THE CENTER LINE OF THE PIPE, AND COMPACTED GRANULAR OR SELECTED MATERIAL FROM THE CENTER LINE OF THE PIPE TO THE TOP OF THE PIPE (90 PERCENT STANDARD PROCTOR DENSITY, AASHTO T-99).
5. 200 PSI TEST PRESSURES FOR FOUR (4) THROUGH SIXTEEN (16) INCH SIZE PIPES.
6. AN INLINE VALVE IS CONSIDERED A DEAD END

IF ACTUAL CONDITIONS DIFFER FROM THOSE LISTED ABOVE OR THE REQUIRED RESTRAINED LENGTH CANNOT BE MET, THE RESTRAINED JOINT LENGTH SHALL BE DETERMINED BY THE DESIGN ENGINEER AND APPROVED BY THE COUNTY REPRESENTATIVE.

WASHINGTON COUNTY PUBLIC WORKS DEPARTMENT

REVISIONS				
DATE	DESCRIPTION	BY	STANDARD DEAD END FOR DUCTILE IRON RESTRAINING SYSTEM DETAIL	STANDARD DWG. NO. 311 — 1 OF 1
				APPROVED:
				DATE: MAY 2009 — BY:

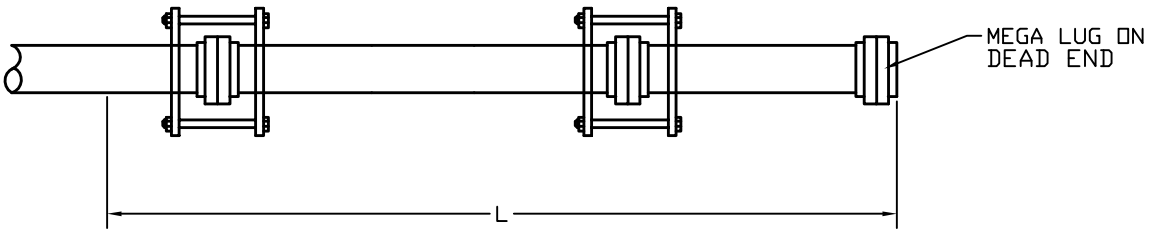

1. ALL JOINTS WITHIN LENGTH "L" MUST BE RESTRAINED. USE RETAINER GLAND AT MECHANICAL JOINTS AND HARNESS WITH PUSH-ON PIPE PER COUNTY SPECIFICATION.

2. FOR TEST PRESSURES AND LAYING CONDITIONS SEE SECTION ON GENERAL NOTES FOR USE OF RESTRAINED JOINT LENGTHS.

PIPE SIZE IN INCHES

4	6	8	10	12	14	16	18	20
44	62	82	99	118	135	153	169	187

RESTRAINED LENGTHS, "L" (IN FEET)

RESTRAINED JOINT LENGTHS USAGE GENERAL NOTES

RESTRAINED LENGTH CALCULATIONS ARE BASED ON THE FOLLOWING DESIGN TYPICALLY USED WITH BACKFILL IN WASHINGTON COUNTY.

1. THREE (3) FEET MINIMUM DEPTH OF COVER.
2. A SAFTEY FACTOR OF 1.5
3. SOIL TYPE SANDY CLAY
4. TYPE 5 TRENCH COMPACTION FROM FOUR (4) INCHES MINIMUM UNDER THE PIPE TO THE CENTER LINE OF THE PIPE, AND COMPACTED GRANULAR OR SELECTED MATERIAL FROM THE CENTER LINE OF THE PIPE TO THE TOP OF THE PIPE (90 PERCENT STANDARD PROCTOR DENSITY, AASHTO T-99).
5. 200 PSI TEST PRESSURES FOR FOUR (4) THROUGH SIXTEEN (16) INCH SIZE PIPES.
6. AN INLINE VALVE IS CONSIDERED A DEAD END.

IF ACTUAL CONDITIONS DIFFER FROM THOSE LISTED ABOVE OR THE REQUIRED RESTRAINED LENGTH CANNOT BE MET, THE RESTRAINED JOINT LENGTH SHALL BE DETERMINED BY THE DESIGN ENGINEER AND APPROVED BY THE COUNTY REPRESENTATIVE.

WASHINGTON COUNTY PUBLIC WORKS DEPARTMENT

REVISIONS				
DATE	DESCRIPTION	BY	IN LINE VALVE\DEAD END ON PVC PIPE DETAIL	STANDARD DWG. NO. 312 — 1 OF 1
				APPROVED:
				DATE: MAY 2009 — BY:

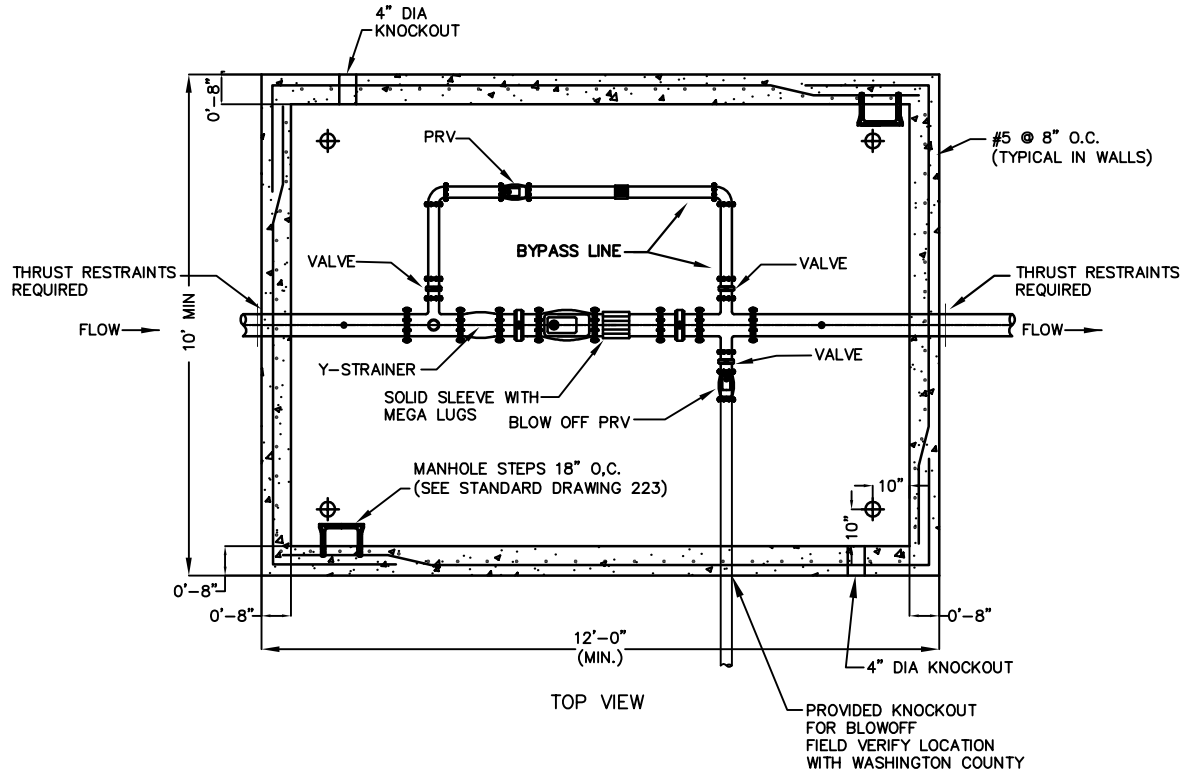

TOP VIEW

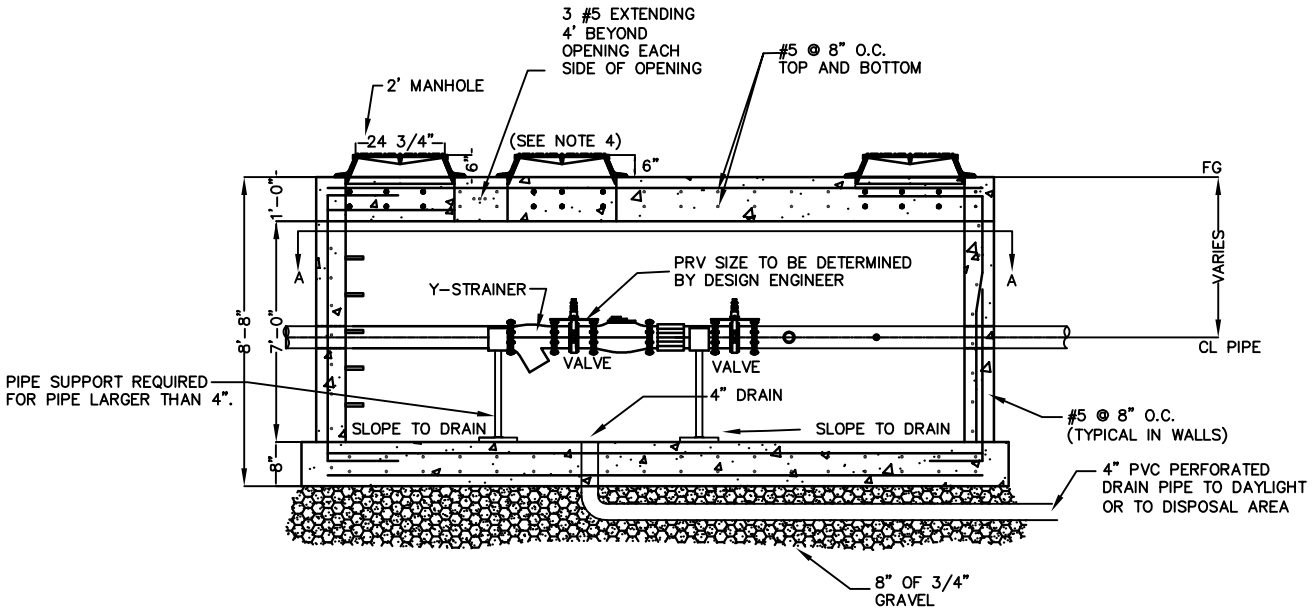

SIDE VIEW

NOTES:

1. REFER TO CONSTRUCTION DRAWINGS FOR SITE AND DETAIL VIEWS.
2. IF VAULT IS IN SIDEWALK THE FINISH GRADE OF VAULT SHALL MATCH SLOPE OF EXISTING SIDEWALK.
3. ALL FITTINGS SHALL BE FLANGED AND MEGA LUGGED.
4. MANHOLE RING & LID WILL VARY WITH SIZE OF PRV. (24" MIN. ACCESS PORTS REQUIRED.)
5. ALL BYPASS PIPING TO BE BRASS .

WASHINGTON COUNTY PUBLIC WORKS DEPARTMENT					
REVISIONS			STANDARD PRESSURE REDUCING VALVE & VAULT FOR NEW CONSTRUCTION	STANDARD DWG. NO.	
DATE	DESCRIPTION	BY		315A	1 OF 2
				APPROVED:	
				DATE: MAY 2009	BY:

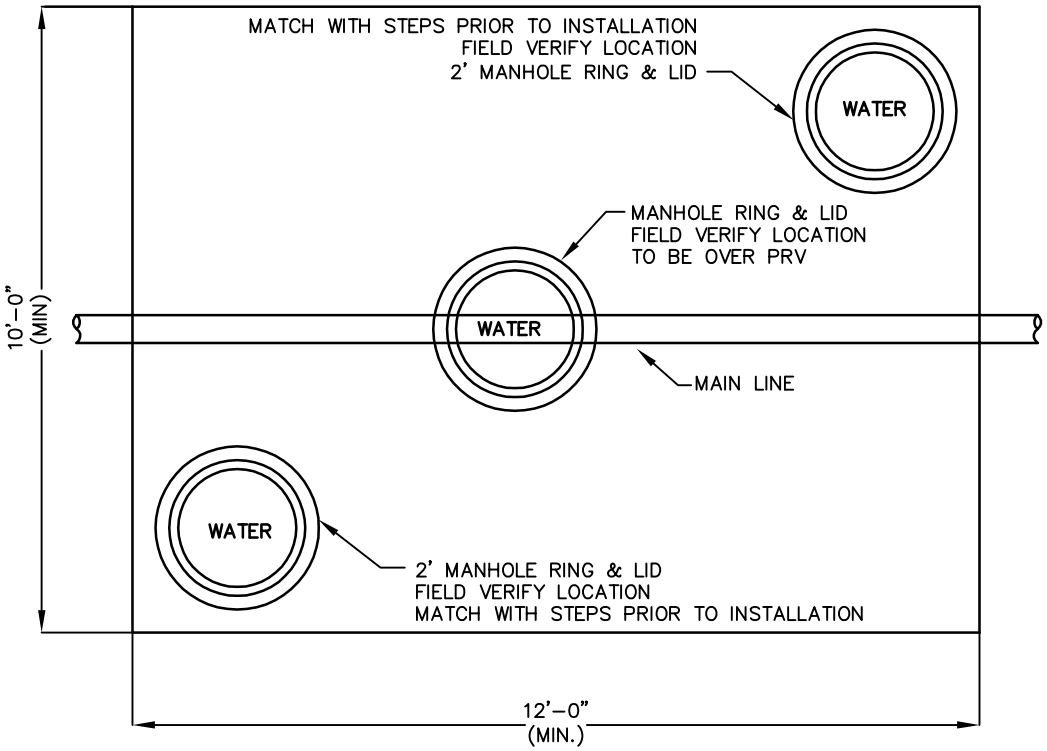

TOP VIEW LID

NOTES:

1. SIZE OF MANHOLE RING & LID WILL VARY WITH SIZE OF PRV.

WASHINGTON COUNTY PUBLIC WORKS DEPARTMENT					
REVISIONS			STANDARD PRESSURE REDUCING VALVE VAULT LID	STANDARD DWG. NO.	
DATE	DESCRIPTION	BY		315B	2 OF 2
				APPROVED:	
				DATE: MAY 2009	BY:

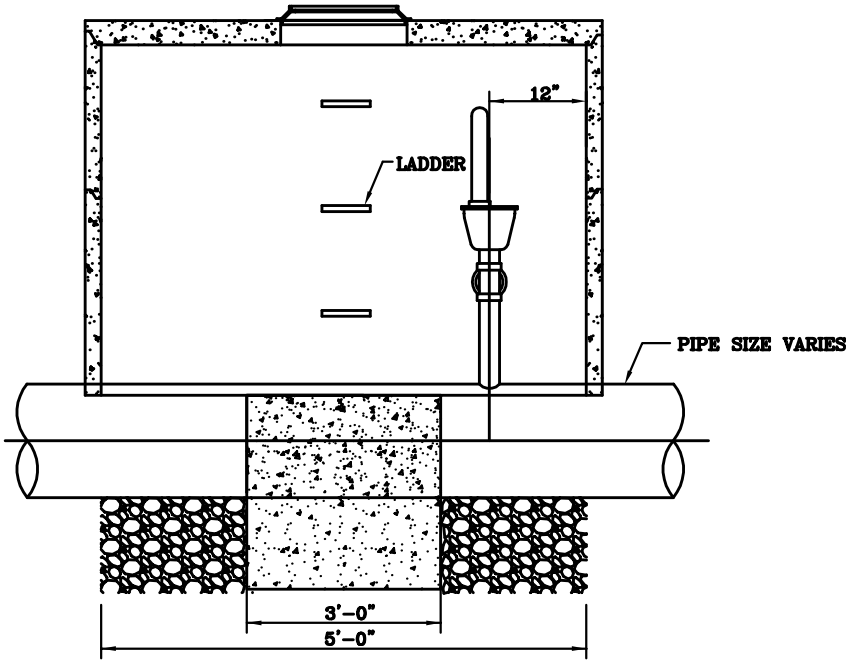

SECTION B/~

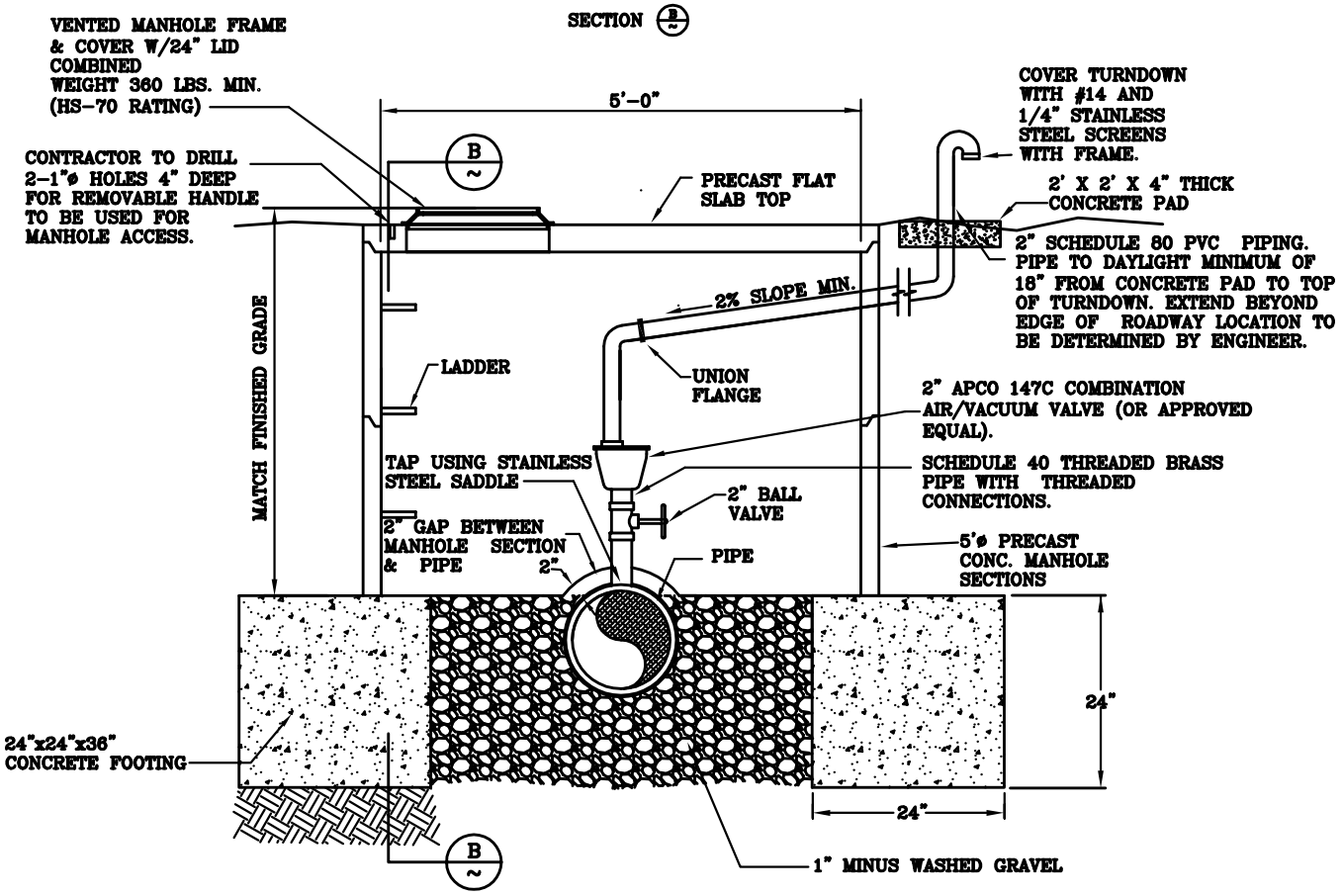

NOTE: ALL AIR VALVES SHALL BE INSTALLED VERTICALLY PLUMB

AIR VALVE SECTION
N.T.S.

WASHINGTON COUNTY PUBLIC WORKS DEPARTMENT

REVISIONS			STANDARD AIR VAC DETAIL	STANDARD DWG. NO.	
DATE	DESCRIPTION	BY		316	1 OF 1
				APPROVED:	
				DATE: MAY 2009	BY:

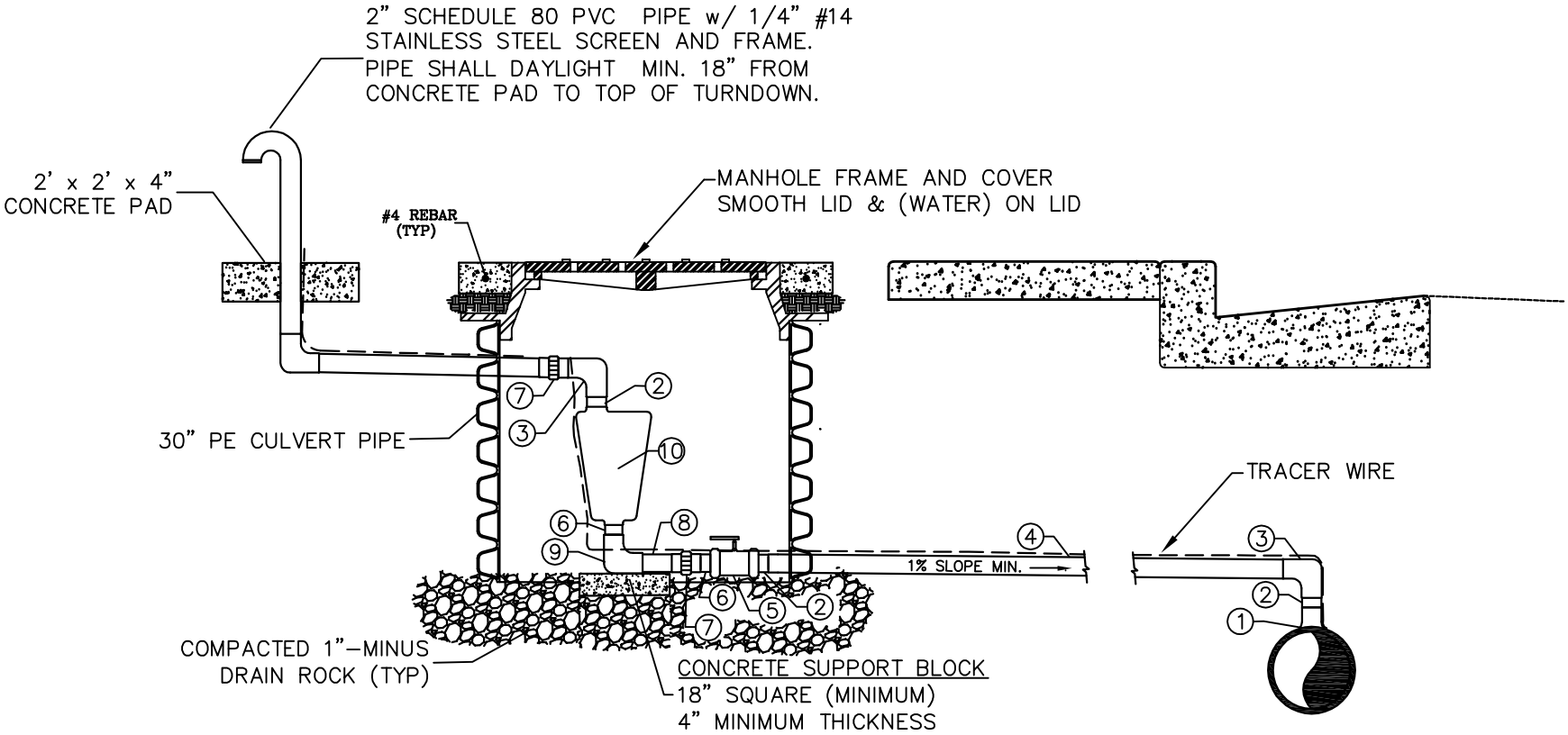

LEGEND

1. THREADED COLLAR OR STAINLESS STEELE SADDLE
2. THREADED CLOSE NIPPLE – 2" BRASS sch 80
3. THREADED 90° ELBOW – 2" BRASS sch 80
4. 2" SCHEDULE 80 POLLY PIPE
5. 2" THREADED BALL VALVE
6. THREADED CLOSE NIPPLE – 2" BRASS
7. UNION FLANGE COUPLER
8. THREADED NIPPLE – 2" BRASS
9. THREADED 90° ELBOW – 2" BRASS
10. 2" APCO 145C COMBINATION AIR/VAC VALVE

WASHINGTON COUNTY PUBLIC WORKS DEPARTMENT

REMOTE AIR VAC DETAIL

REVISIONS		
DATE	DESCRIPTION	BY

STANDARD DWG. NO. 317

1 OF 1

APPROVED:

DATE: **MAY 2009** BY:

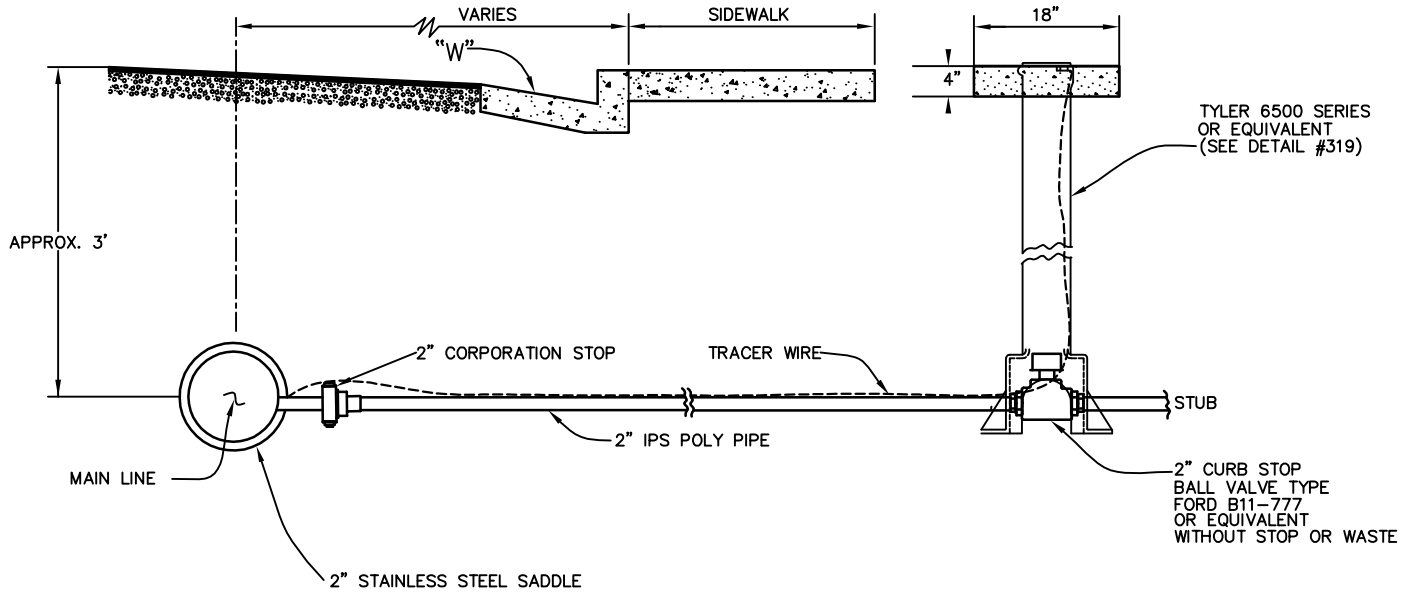

NOTES:
1- ALL FITTINGS ARE TO BE BRASS EXECPT AS NOTED.

WASHINGTON COUNTY PUBLIC WORKS DEPARTMENT					
REVISIONS			2" FIRE LINE DETAIL	STANDARD DWG. NO.	
DATE	DESCRIPTION	BY		318	1 OF 1
				APPROVED:	
				DATE: MAY 2009	BY:

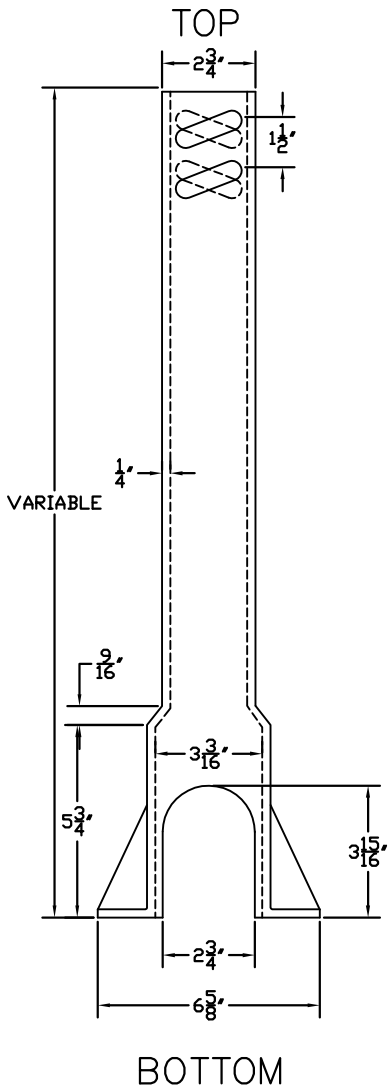

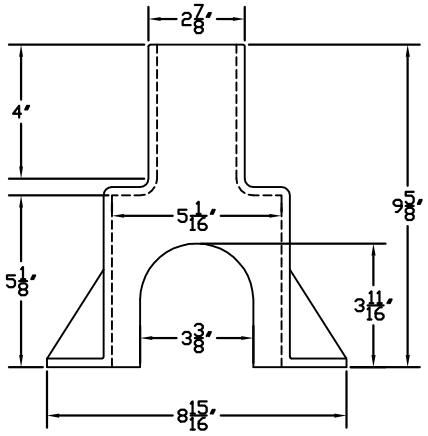

ENLARGED BASE
FOR 2" CURBSTOP

ITEM	HEIGHT INCREASE
6500	6"

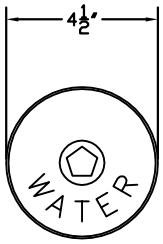

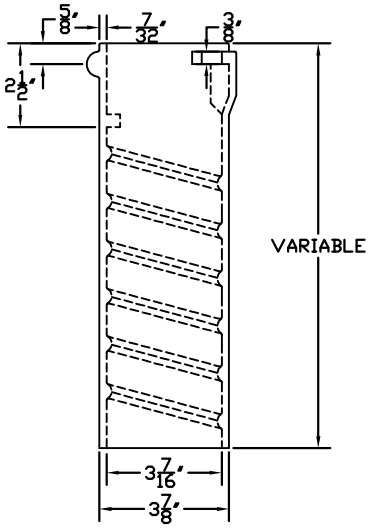

WASHINGTON COUNTY PUBLIC WORKS DEPARTMENT

REVISIONS		
DATE	DESCRIPTION	BY

FIRE LINE VALVE BOX

STANDARD DWG. NO.	
319	1 OF 1
APPROVED:	
DATE: MAY 2009	BY:

NOTES:

1. THIS DETAIL SHALL BE REQUIRED WHEN NEW OR EXISTING PIPE INSTALLATIONS WILL BE SUBJECT TO DAMAGE ANYTIME IN THE FUTURE DUE TO LACK OF PROPER COVER OR WHEN MINIMUM SEPARATION BETWEEN CROSSING OR ADJACENT UTILITIES CAN NOT BE MAINTAINED, AS DETERMINED BY THE COUNTY REPRESENTATIVE.
2. FOR PIPE OVER 18" DIA., WOOD, METAL, OR GYPSUM BOARD FORMS MUST BE USED TO FORM THE SIDES OF THE ENCASEMENT. GYPSUM BOARD FORMS MAY BE LEFT IN THE GROUND BELOW THE TOP OF THE ENCASEMENT. THIS SHALL BE OPTIONAL WITH POURING AGAINST TRENCH WALLS FOR ENCASEMENT OF 18" AND SMALLER PIPE.
3. FOR ALL SITUATIONS WHERE SIDE FORMS ARE USED, TRENCH WALLS SHALL BE OVER-EXCAVATTED TO ALLOW SUFFICIENT ROOM TO OPERATE PROPER MECHANICAL COMPACTION EQUIPMENT.
4. CONCRETE WHICH SPILLS BEYOND 12" FROM THE SIDES OF THE PIPE FOR ANY REASON SHALL BE REMOVED BACK TO THE PROPER LINE PRIOR TO BACKFILLING.
5. COVER TO BE APPROVED BY DESIGN ENGINEER AND COUNTY REPRESENTATIVE..
6. THE CONCRETE ENCASEMENT SHALL BE 3000 PSI CONCRETE WITH A MINIMUM THICKNESS ON ALL SIDES OF 6".
   1) 8" DIA. = .11 C.Y. OF CONCRETE PER LINEAL FT.
   2) 10" DIA. = .12 C.Y. OF CONCRETE PER LINEAL FT.
   3) 12" DIA. = .14 C.Y. OF CONCRETE PER LINEAL FT.
   4) 15" DIA. = .15 C.Y. OF CONCRETE PER LINEAL FT.

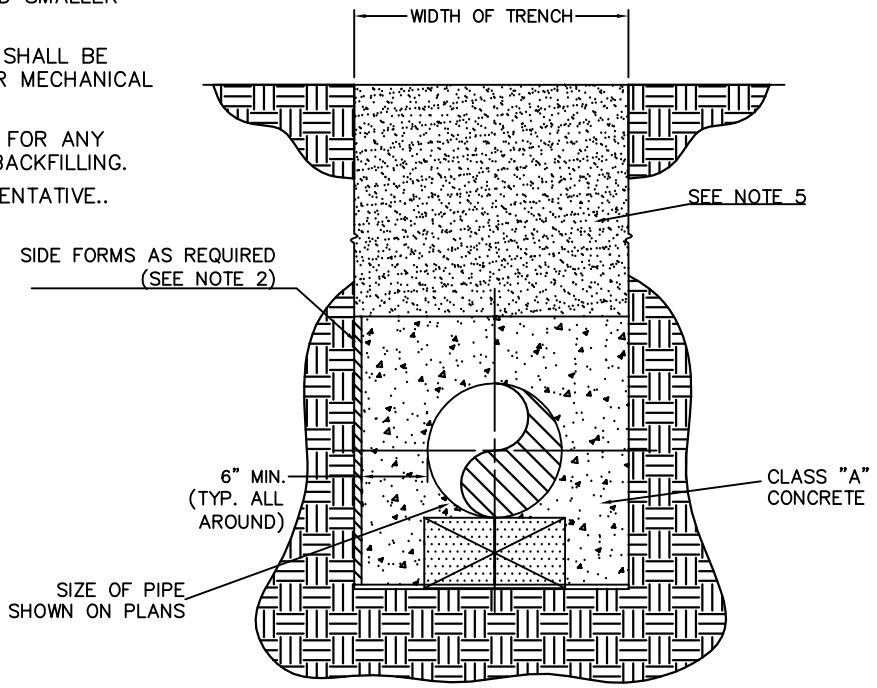

END SECTION

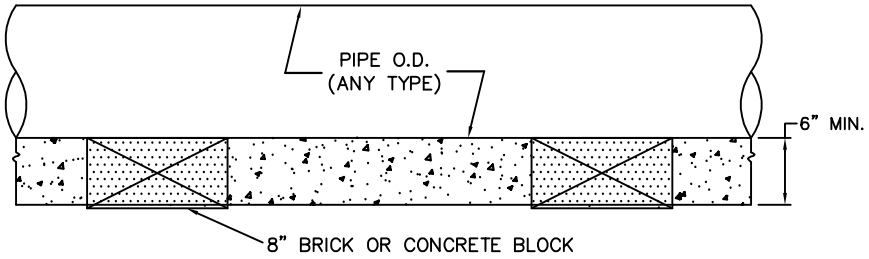

LONGITUDINAL SECTION

WASHINGTON COUNTY PUBLIC WORKS DEPARTMENT

CONCRETE ENCASEMENT DETAIL

REVISIONS		
DATE	DESCRIPTION	BY

STANDARD DWG. NO. 330

1 OF 1

APPROVED:

DATE: MAY 2009 BY:

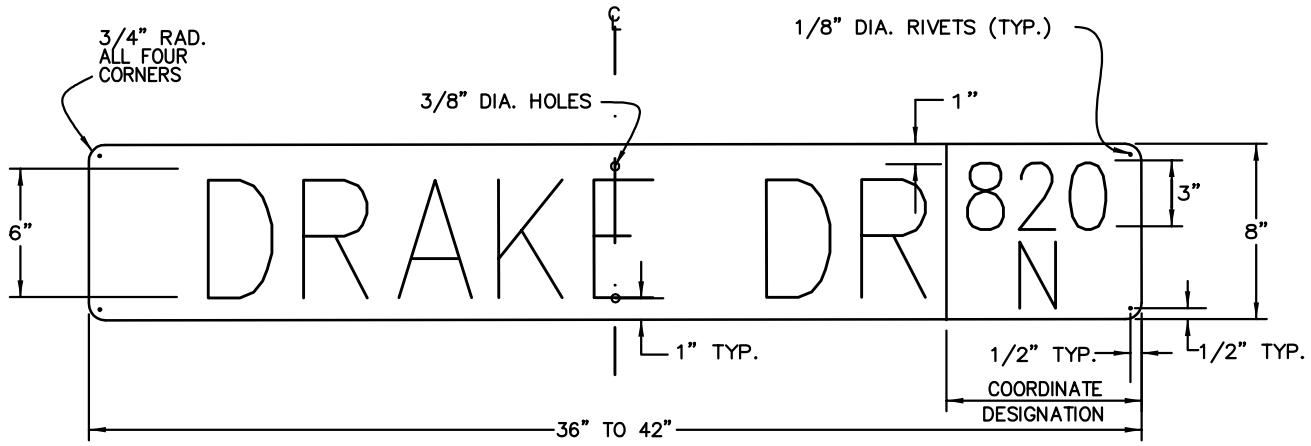

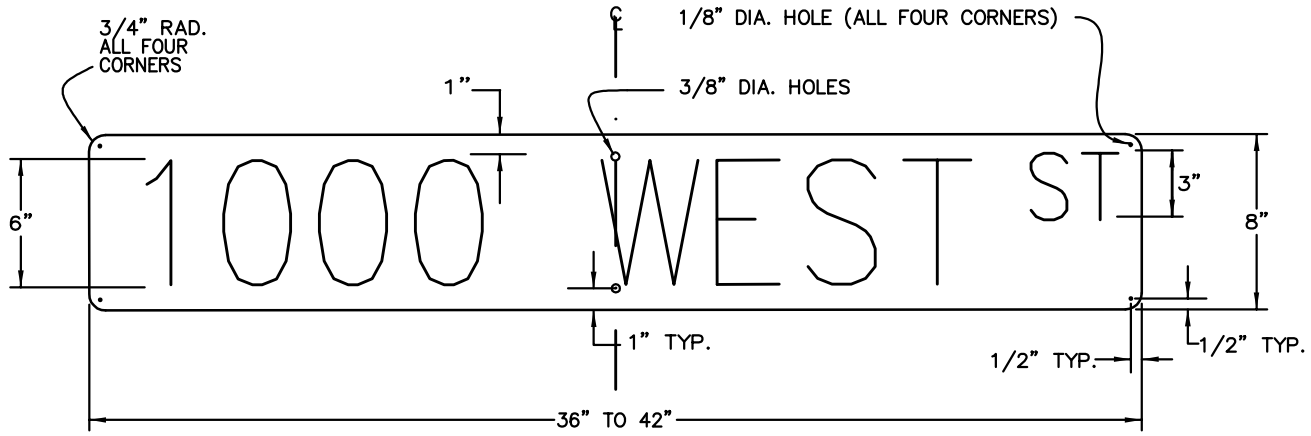

NOTES:

1– BACKGROUND SHALL BE GREEN, LEGEND AND LETTERS SHALL BE WHITE.
2– ALL SHEETING SHALL BE HIGH INTENSITY REFLECTIVE SHEETING. (FP–85 TYPE III A)
3– SIGNS SHOULD BE MADE BY THE "REVERSE OUT" PROCESS. NO STICK ON LETTERS.

4– SIGN BLANK SHALL BE 6061–T6 HEAT TREATED HIGH TENSILE DEGREASED ALUMINUM WITH ALODINE 1200 FINISH. MIN. THICKNESS SHALL BE 0.080".
5– EACH SIGN SHALL CONSIST OF TWO PLATES RIVETED TOGETHER AND MOUNTED AS REQUIRED.
6– SIGNS ON PRIVATE ROADS ARE REQUIRED AND SHOULD MEET SAME SPECIFICATIONS OF STANDARD SIGNS EXCEPT FOR BACKGROUND COLOR.
7– ALL STREETS WITH NAMES SHALL ALSO HAVE THE COORDINATE DESIGNATION ON THE SIGN IN THE APPROPRIATE LOCATION UNLESS OTHERWISE APPROVED.
8– ADDRESS COORDINATOR SHALL BE CONTACTED PRIOR TO MAKING SIGNS TO VERIFY PROPER NAMES AND COORDINATES.
9– ALL LETTERS SHALL BE UPPER CASE. LETTERS AND NUMBERS SHALL CONFORM TO THE HEIGHT, WIDTH, STROKE WIDTH, AND SPACING AS PER THE U.S. DEPT. OF TRANSPORTATION PUBLICATION "STANDARD ALPHABET FOR HIGHWAY SIGNS".

WASHINGTON COUNTY PUBLIC WORKS DEPARTMENT

REVISIONS		
DATE	DESCRIPTION	BY

STANDARD STREET SIGN

STANDARD DWG. NO.	
400	1 OF 1
APPROVED:	
DATE: MAY 2009	BY: TE

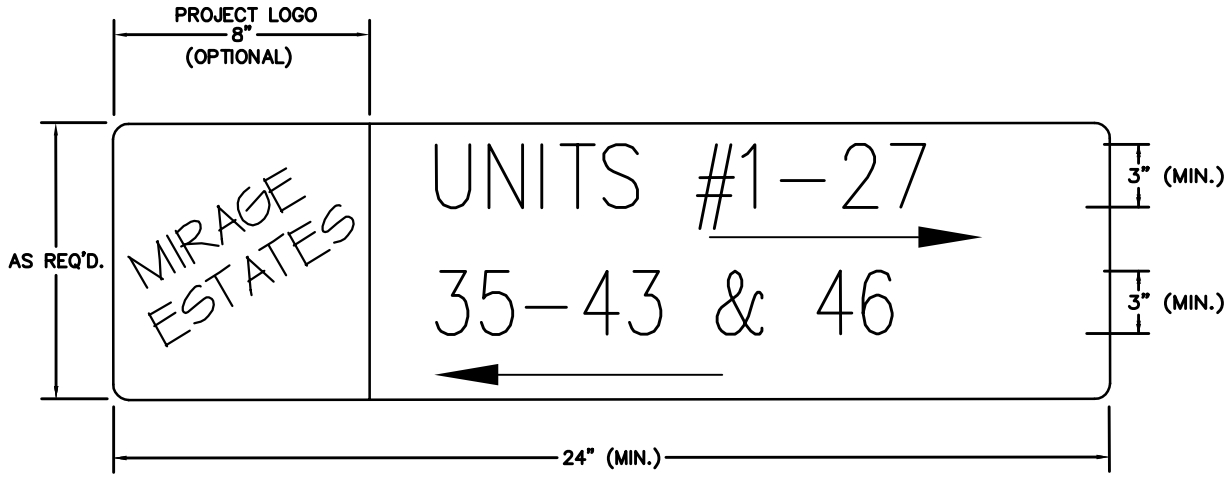

INTERIOR DIRECTIONAL SIGN

MAIN ENTRANCE STREET SIGN

NOTES:

1- SIGNS SHALL CONFORM TO CITY STREET SIGN STANDARDS AND SPECIFICATIONS.
2- STANDARD BACKGROUND IS BLUE. LETTERS AND LEGEND SHALL BE WHITE. SHEETING TYPE SHALL BE HIGH INTENSITY
3- SIGNS MOUNTED ON PUBLIC RIGHT OF WAY SHALL FOLLOW CITY INSTALLATION AND PLACEMENT STANDARDS. SAID STANDARDS ARE RECOMMENDED FOR INTERIOR SIGNS.
4- WHEN PROJECT IS ADDRESSED SIMILAR TO A SUBDIVISION WITH PUBLIC STREETS, THE ABOVE INTERIOR DIRECTIONAL SIGN IS NOT USED. SEE COUNTY ADDRESS COORDINATOR.
5- PROJECT LOGO, IF USED, MUST BE APPROVED BY THE COUNTY ADDRESS COORDINATOR PRIOR TO USE.

WASHINGTON COUNTY PUBLIC WORKS DEPARTMENT

REVISIONS		
DATE	DESCRIPTION	BY

PRIVATE STREET SIGNS

STANDARD DWG. NO.	
401	1 OF 1
APPROVED:	
DATE: MAY 2009	BY: TE

SIGN DESIGNATION FORM

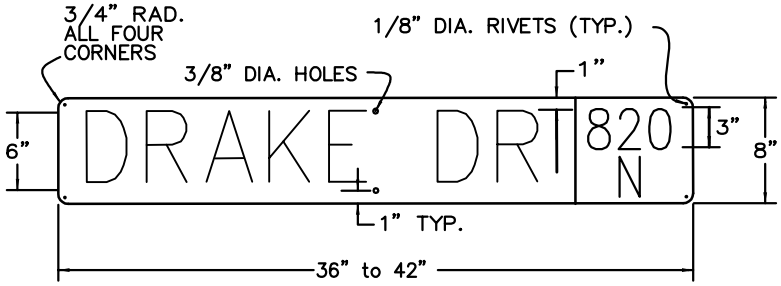

STANDARD WASHINGTON COUNTY SIGN

THIS FORM TO BE COMPLETED BY THE COUNTY ADDRESS COORDINATOR PRIOR TO ORDERING OF STREET SIGNS BY DEVELOPER.

PROJECT NAME

DATE BY

NOTES:

1– SEE DRAWINGS #400 & 401 FOR SIGN SPECIFICATIONS.
2– SIGNS ON PRIVATE ROADS SHALL MEET ALL SPECIFICATIONS OF STANDARD SIGNS EXCEPT BACKGROUND SHALL BE BLUE.
3– ADDRESS COORDINATOR MUST BE CONTACTED PRIOR TO MAKING SIGNS TO VERIFY PROPER NAMES AND COORDINATES.
4– ALL STREETS WITH NAMES WILL ALSO HAVE COORDINATES DESIGNATED ON SIGN.

LOCATION GUIDE

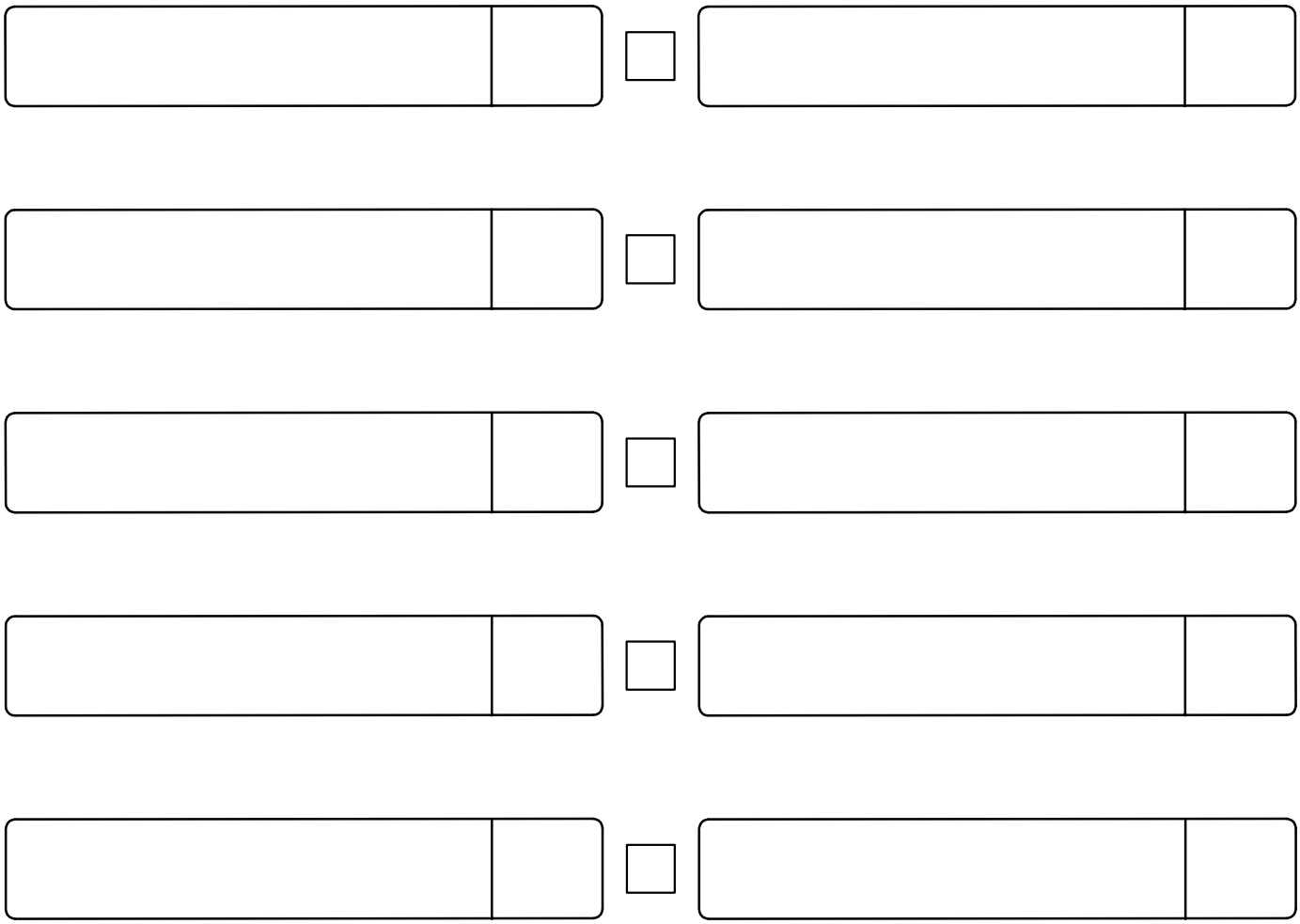

WASHINGTON COUNTY PUBLIC WORKS DEPARTMENT

REVISIONS		
DATE	DESCRIPTION	BY

SIGN DESIGNATION FORM

STANDARD DWG. NO.	
402	1 OF 1
APPROVED:	
DATE:MAY 2009	BY:

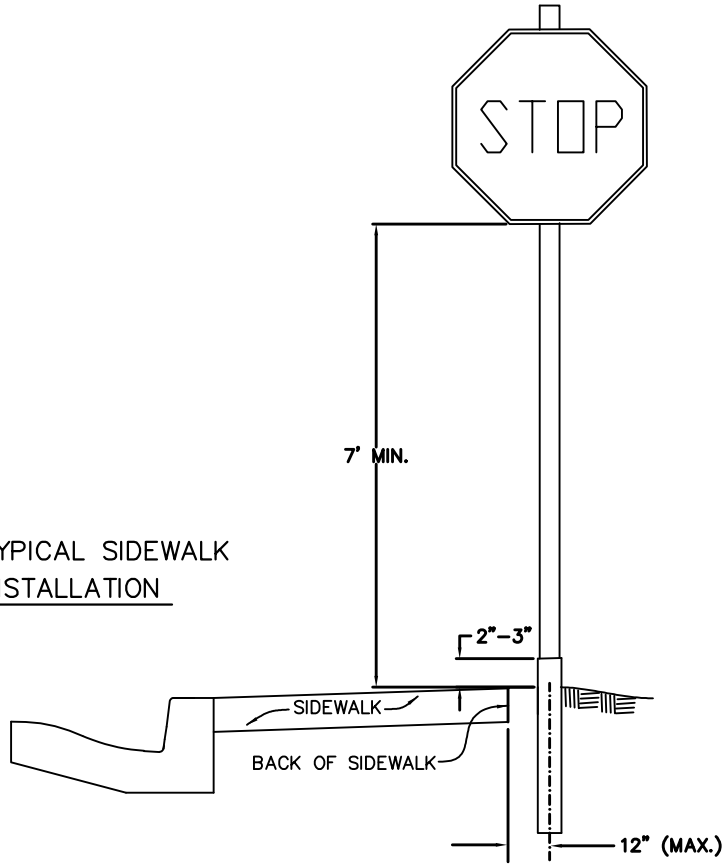

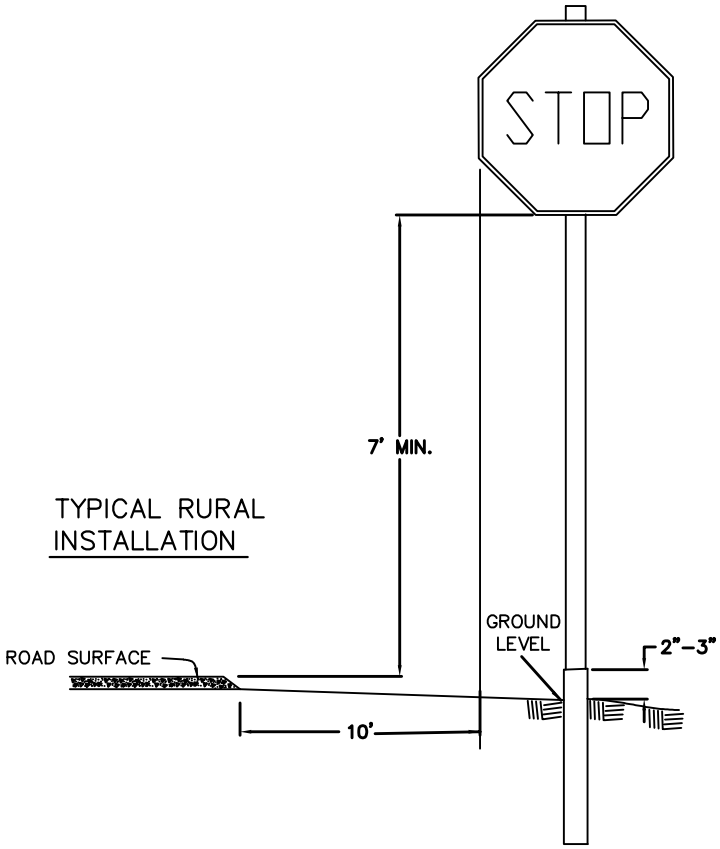

NOTES:

1– SIGNS SHALL BE PLACED IN CONFORMANCE WITH THE MANUAL ON UNIFORM TRAFFIC CONTROL DEVICES. (M.U.T.C.D.).

2– STREET NAME SIGNS SHALL BE REQUIRED ON ALL COUNTY ROADS.

3– ALL POST COMPONENTS SHALL BE GALVANIZED STEEL.

4– STREET NAME SIGNS PLACED ABOVE STOP SIGN SHALL BE AS SHOWN IN DRAWING 411.

5– WHERE PLANTER STRIP LIES BETWEEN SIDEWALK AND CURB, SIGNS SHALL BE INSTALLED IN PLANTER STRIP AS PER M.U.T.C.D.

6– SIGNS SHALL BE PLACED TO BE CLEARLY VISABLE. ALL OBSTRUCTIONS SUCH AS TREES, POLES, OTHER SIGNS, ETC, SHALL BE AVOIDED.

WASHINGTON COUNTY PUBLIC WORKS DEPARTMENT

REVISIONS				STANDARD DWG. NO.	
DATE	DESCRIPTION	BY	SIGN, POST AND INSTALLATION DETAILS	410	1 OF 1
				APPROVED:	
				DATE: MAY 2009	BY:

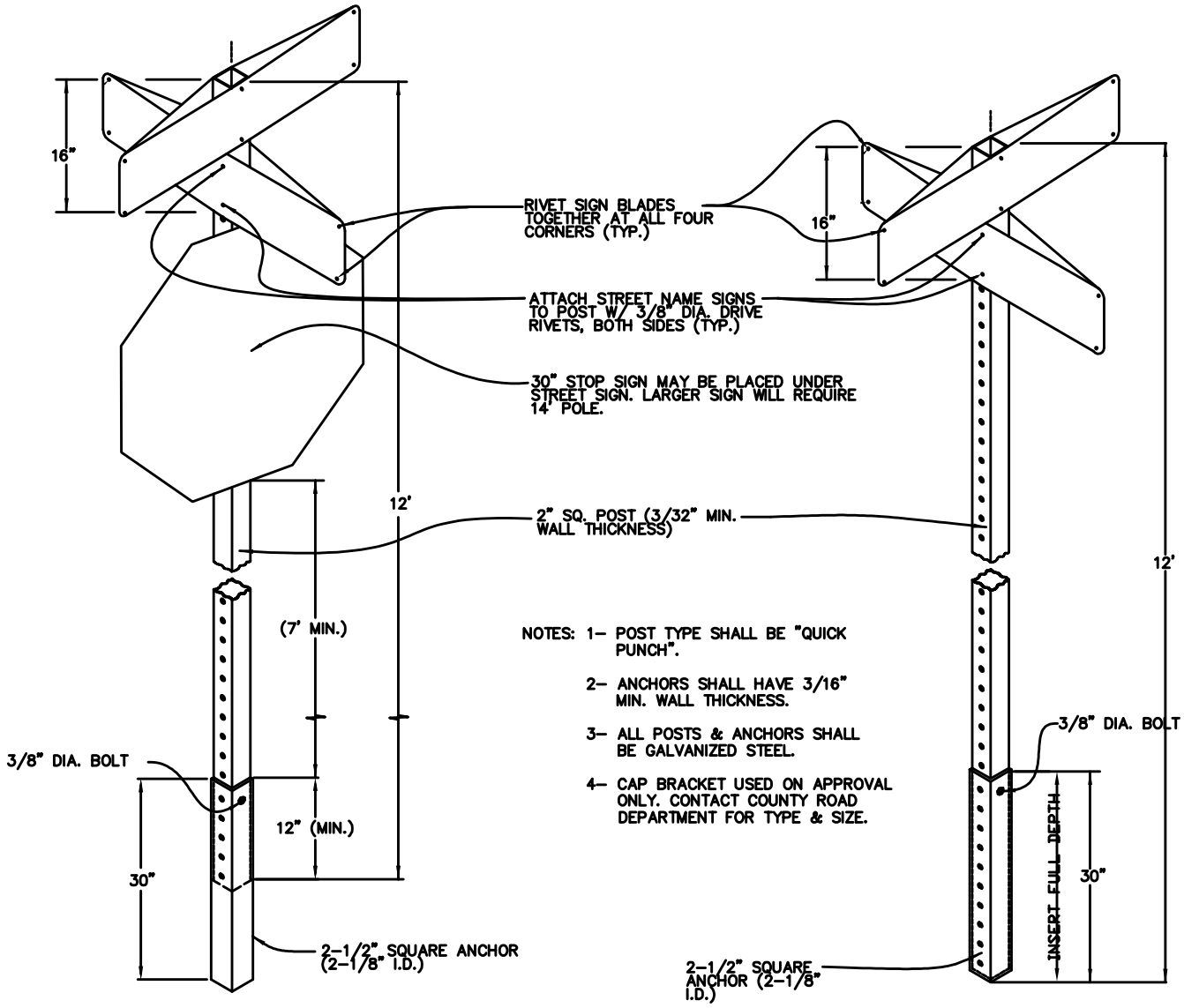

INSTALLATION METHOD A

INSTALLATION METHOD B

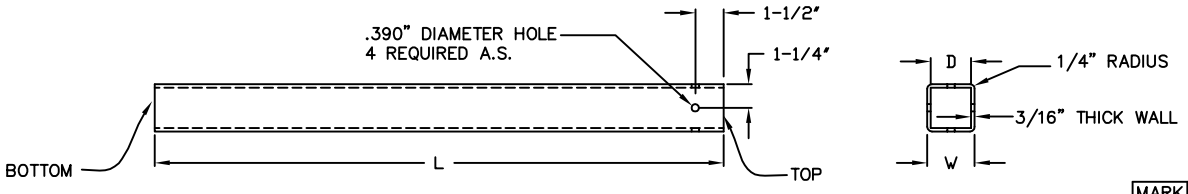

MARK	DIM.	TOLERANCE
D	2-1/8"	+1/16',-0"
L	30"	±1/2"
W	2-1/2"	±1/64"

SIGN ANCHOR DETAIL

WASHINGTON COUNTY PUBLIC WORKS DEPARTMENT

REVISIONS		
DATE	DESCRIPTION	BY

SIGN POST & MOUNTING DETAILS

STANDARD DWG. NO.	
411	1 OF 1
APPROVED:	
DATE: MAY 2009	BY:

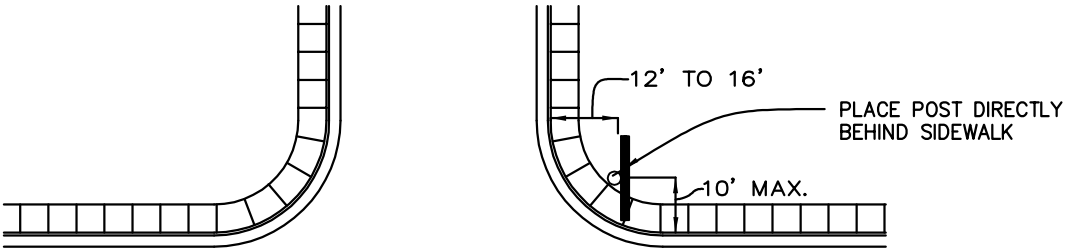

TYPICAL URBAN INSTALLATION

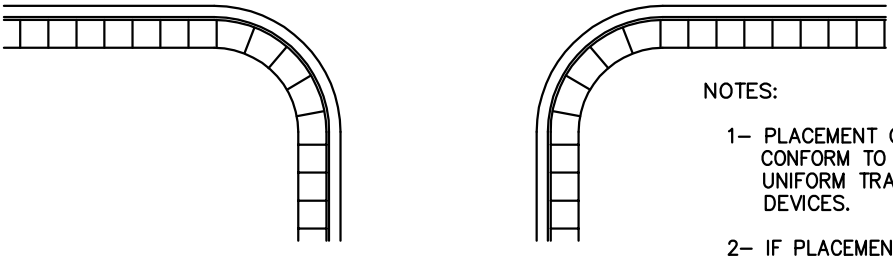

NOTES:

1– PLACEMENT OF ALL SIGNS TO CONFORM TO THE MANUAL ON UNIFORM TRAFFIC CONTROL DEVICES.

2– IF PLACEMENT STANDARDS CANNOT BE MET, CONTACT PUBLIC WORKS DEPARTMENT.

3– IF INSTALLATION ACCORDING TO STANDARDS CAUSES THE SIGN TO BE OBSTRUCTED OR ITS VISIBILITY IMPAIRED IN ANY WAY, MODIFICATIONS MAY BE NECESSARY. CALL PUBLIC WORKS DEPT. FOR ASSISTANCE.

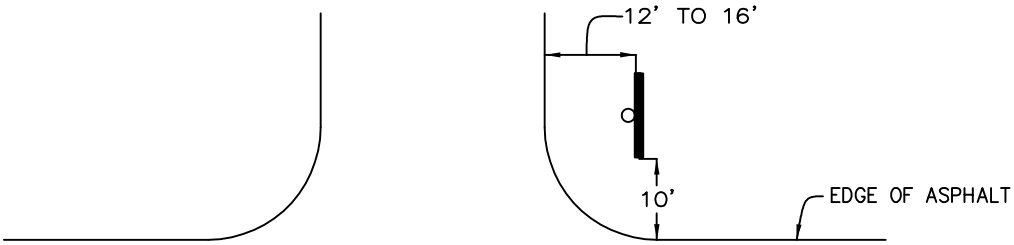

TYPICAL RURAL INSTALLATION

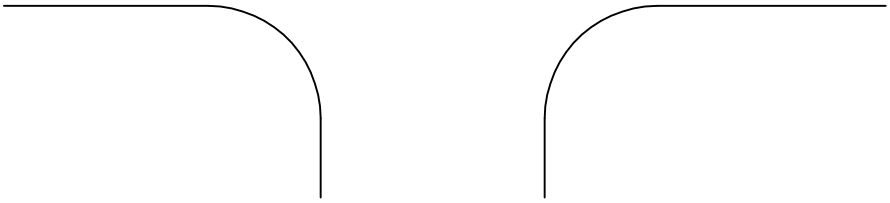

WASHINGTON COUNTY PUBLIC WORKS DEPARTMENT

REVISIONS			TYPICAL SIGN PLACEMENT DETAILS	STANDARD DWG. NO.	
DATE	DESCRIPTION	BY		412	1 OF 1
				APPROVED:	
				DATE: MAY 2009	BY: