US Highway 91-Shivwits EWP 2012
Washington County, Utah

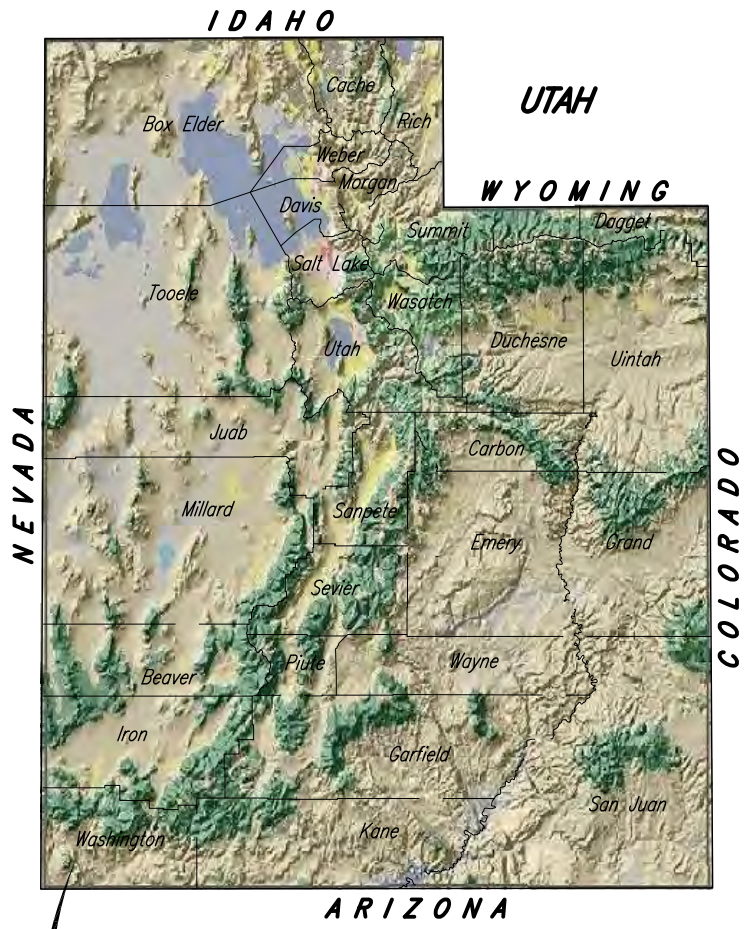

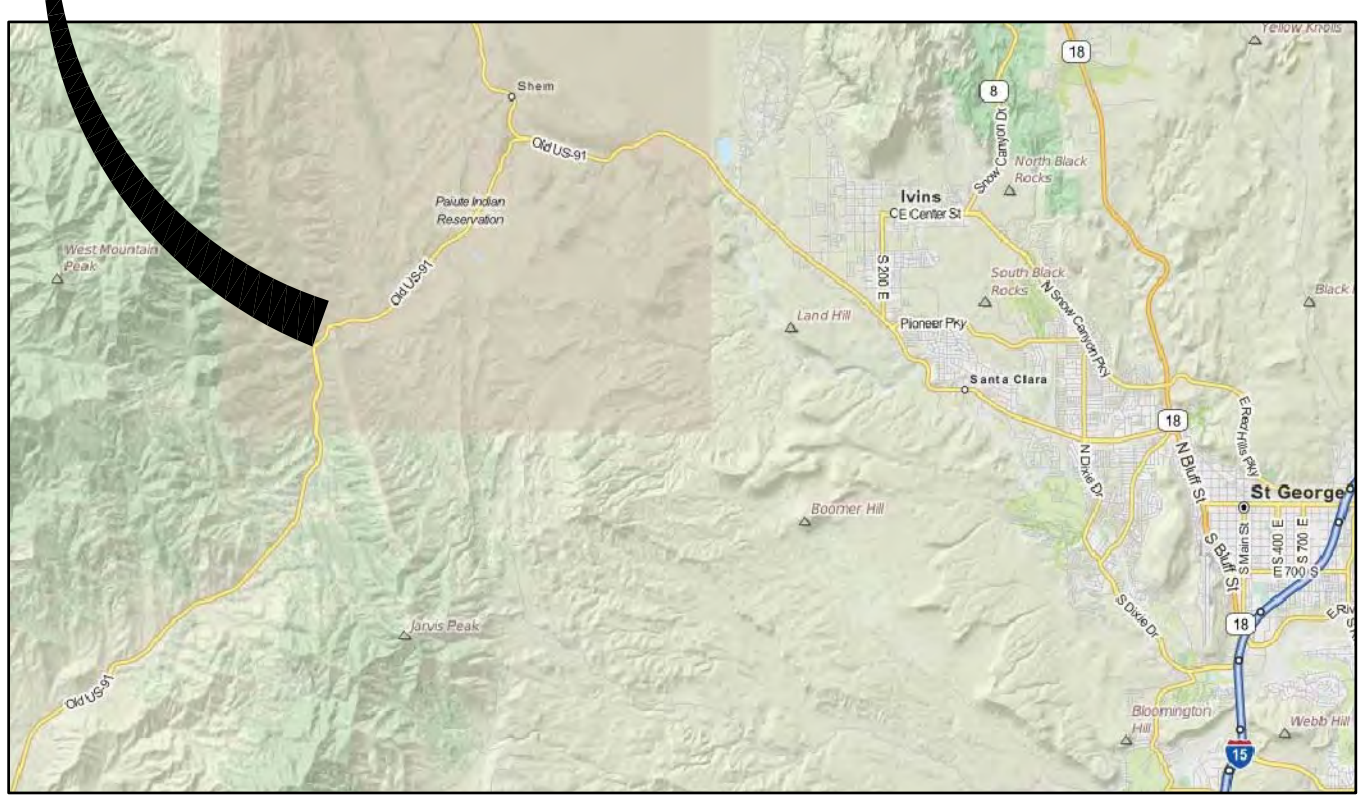

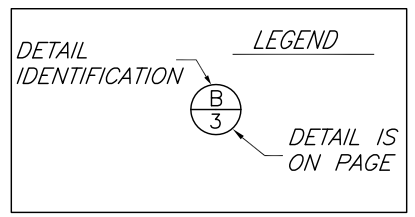

Sheet Index

Sheet Number	Sheet Title
1	Cover Sheet
2	Project Layout
3	Site 1
4	Site 2
5	Site 3
6	Details

I HAVE REVIEWED AND I ACCEPT THE PLANS AND SPECIFICATIONS FOR THE CONSTRUCTION OF THE PROJECT SHOWN ON THESE DRAWINGS.

SPONSOR APPROVING AUTHORITY *DATE*

NRCS APPROVING AUTHORITY *DATE*

UTILITY NOTIFICATION

The Natural Resources Conservation Service makes no representation as to the existence or nonexistence of any utilities at the construction site. Shown on these construction drawings are those utilities which have been identified. It is the responsibility of the contractor(s) to do their own check to assure that no hazard exists or damage will occur to utilities.

		Date
Designed	JDN	07/12
Drawn	JDN	08/12
Checked	SR	08/12
Approved	BS	08/12

US Highway 91-Shivwits EWP 2012
Cover Sheet
Washington County, Utah

Job Class V

NRCS
Natural Resources Conservation Service
United States Department of Agriculture

File No.
US91-Shivwits.dwg

August 29, 2012

Sheet 1 of 6

80 0 80 160 240

Scale in Feet

		Date
Designed	JDN	07/12
Drawn	JDN	08/12
Checked	SR	08/12
Approved	BS	08/12

Job Class V

US Highway 91–Shivwits EWP 2012
Project Layout

Washington County
Washington County, Utah

NRCS
Natural Resources Conservation Service
United States Department of Agriculture

File No.
US91–Shivwits.dwg

August 29, 2012

Sheet 2 of 6

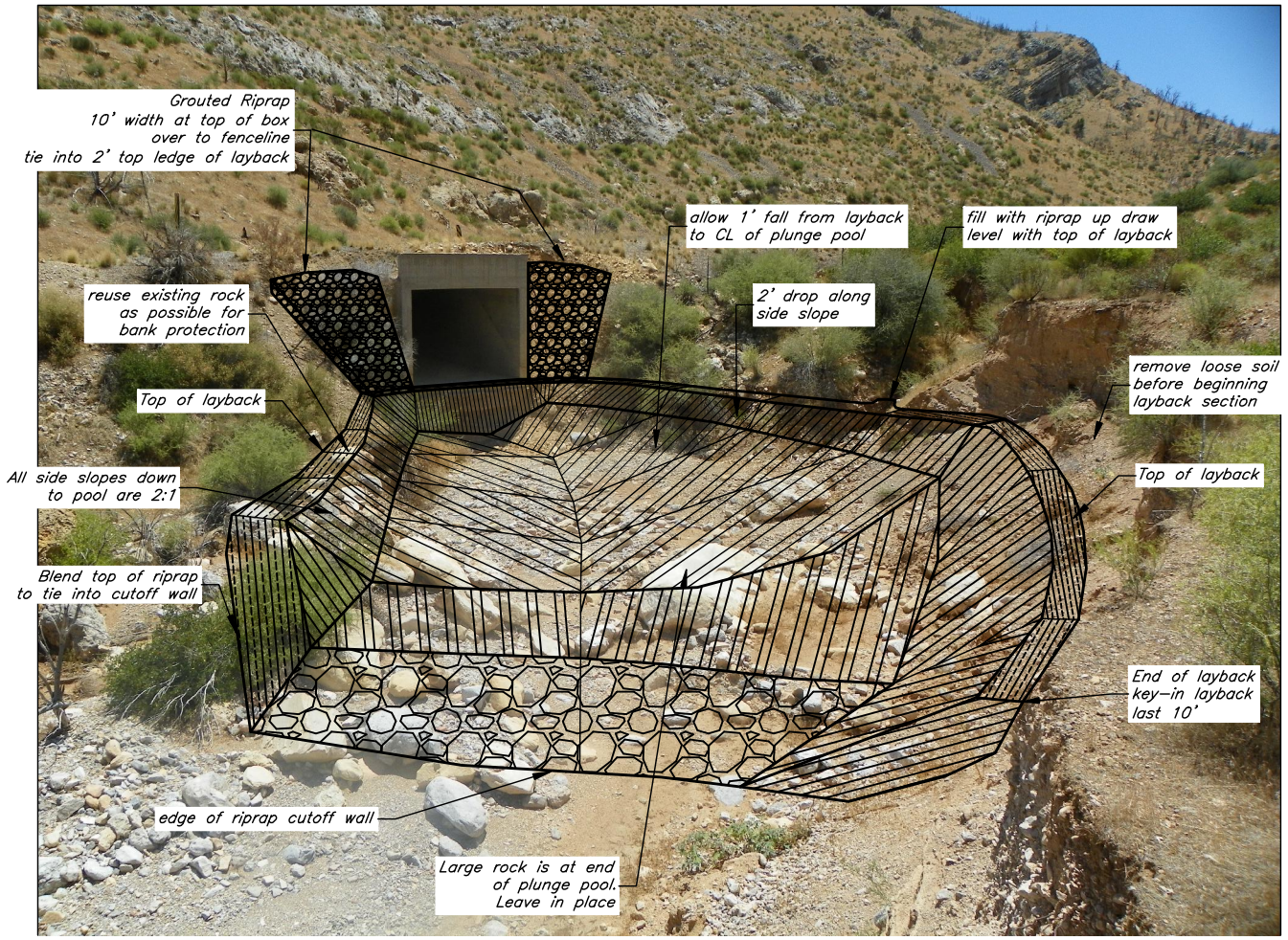

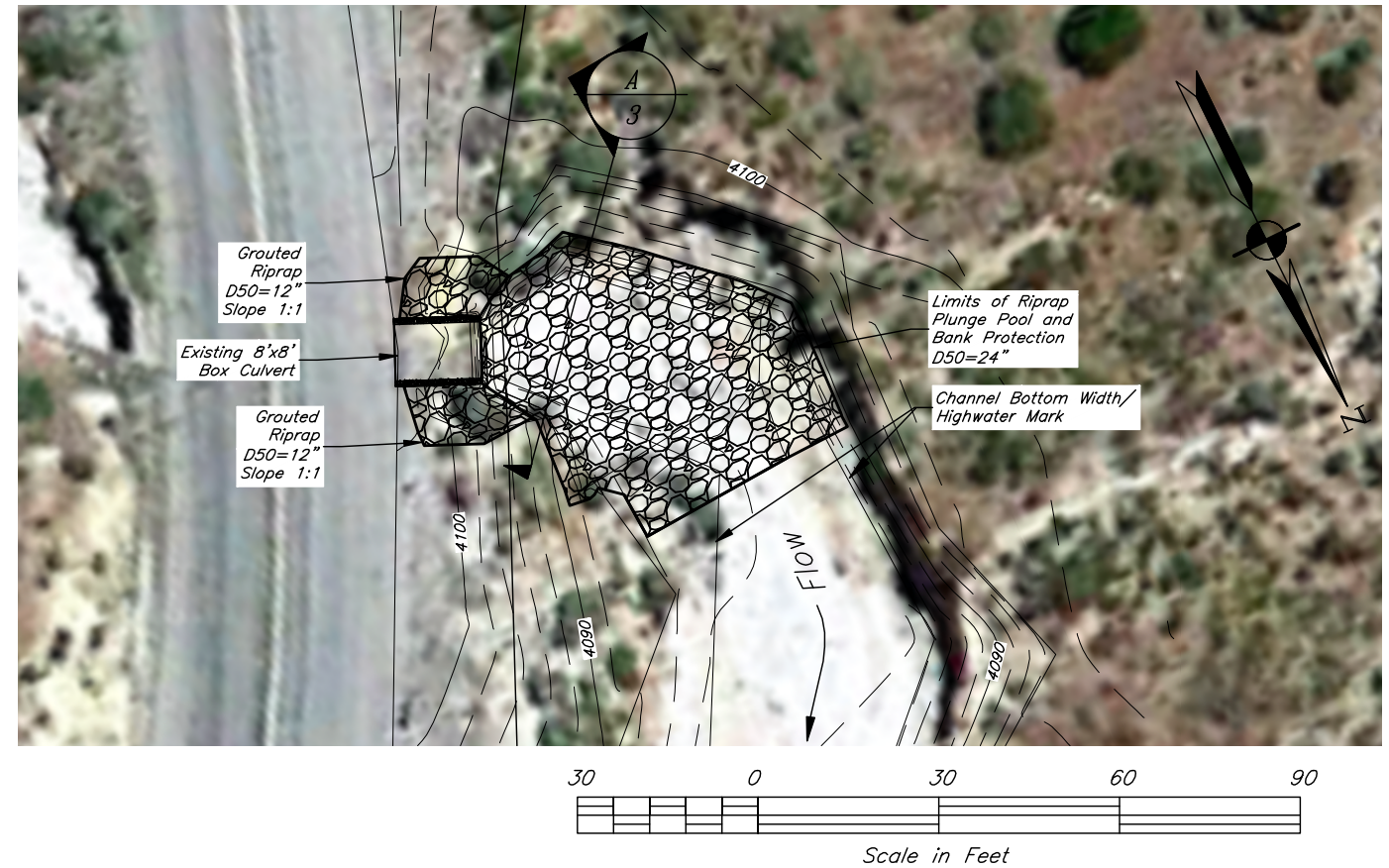

30 0 30 60 90

Scale in Feet

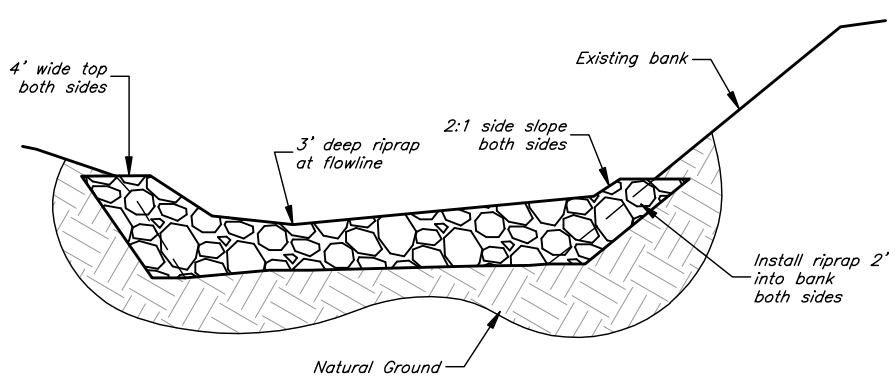

A Plunge Pool Cross Section

N.T.S.

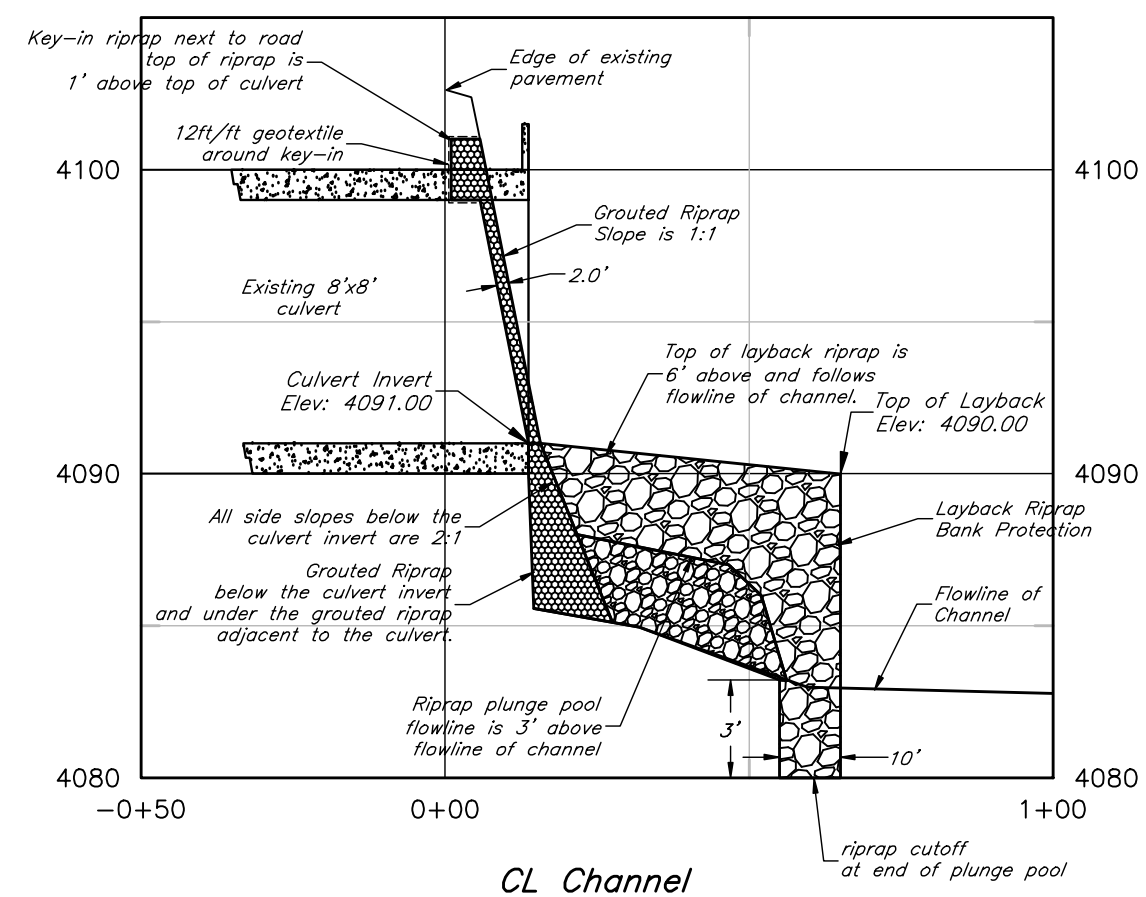

CL Channel

		Date
Designed	JDN	07/12
Drawn	JDN	08/12
Checked	SR	08/12
Approved	BS	08/12

Job Class V

US Highway 91-Shivwits EWP 2012

Site 1

Washington County

Washington County, Utah

NRCS

Natural Resources Conservation Service

United States Department of Agriculture

File No.
US91-Shivwits.dwg

August 29, 2012

Sheet 3 of 6

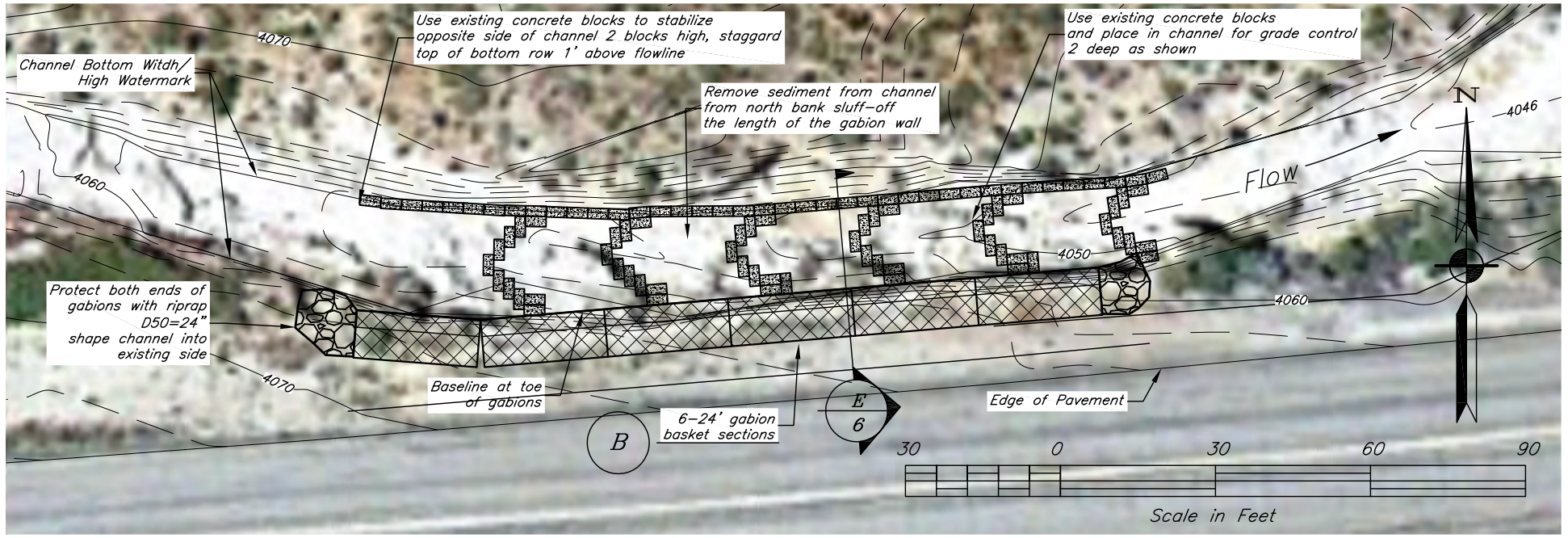

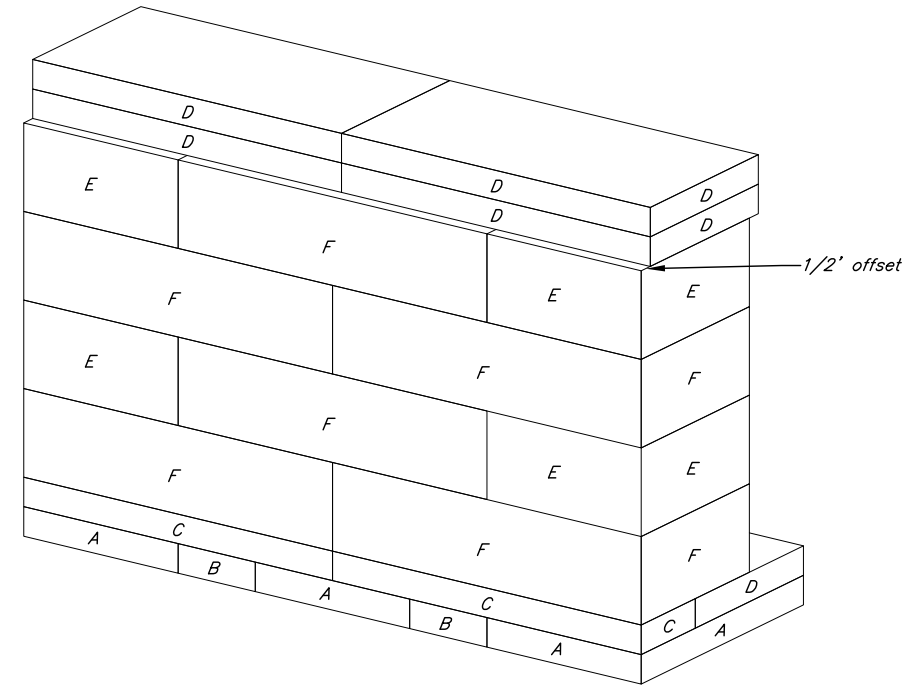

B Typical 24' Gabion Section

N.T.S.

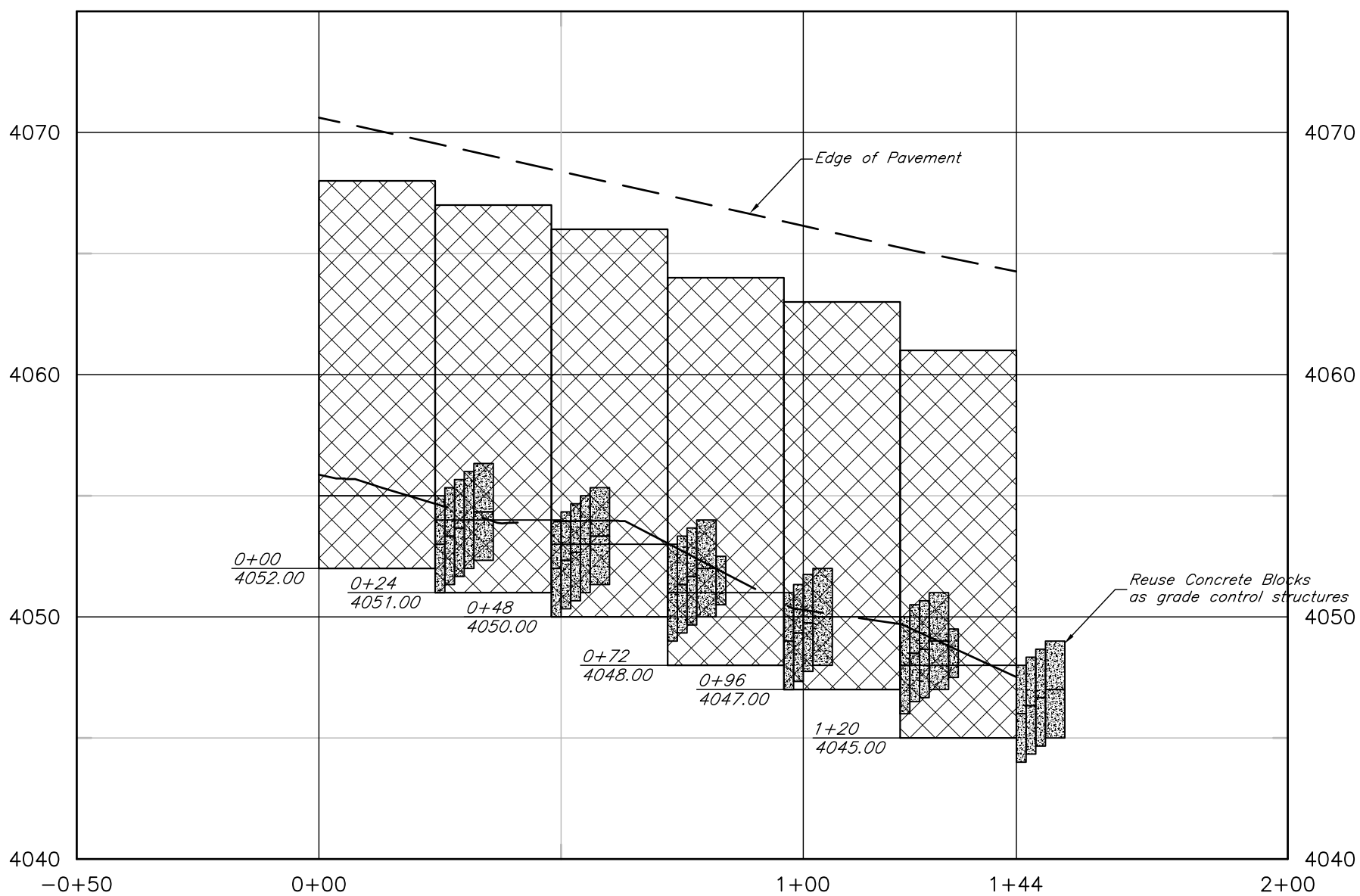

Gabion Baskets Profile

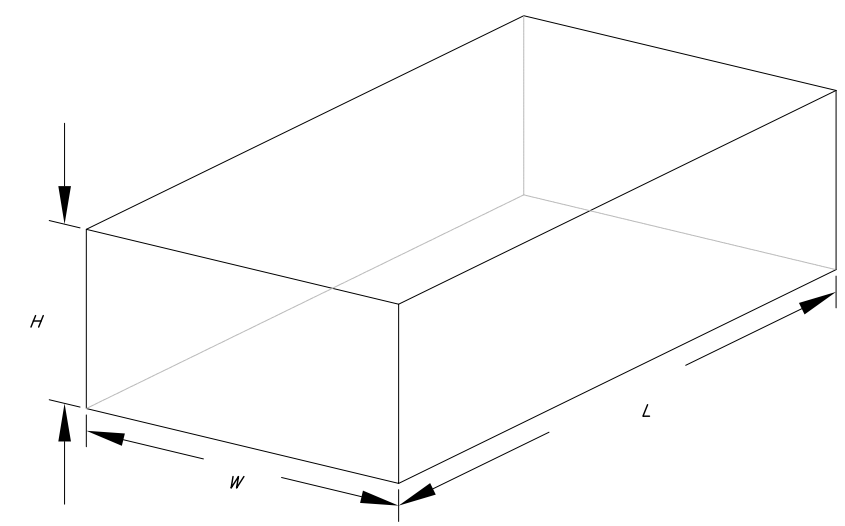

Gabion Basket Dimensions (ft)				
Basket Type	Length (L)	Width (W)	Height (H)	Cubic Yards
A	9	6	1	2
B	9	3	1	1
C	12	3	1	1.3
D	12	6	1	2.7
E	6	6	3	4
F	12	6	3	8

Gabion Baskets for each 24' Section	
Basket Type	Quantity
A	3
B	2
C	2
D	6
E	4
F	6

		Date
Designed	JDN	07/12
Drawn	JDN	08/12
Checked	SR	08/12
Approved	BS	08/12

Job Class V

US Highway 91-Shivwits EWP 2012
Site 2
Washington County
Washington County, Utah

NRCS
Natural Resources Conservation Service
United States Department of Agriculture

File No.
US91-Shivwits.dwg

August 29, 2012

Sheet 4 of 6

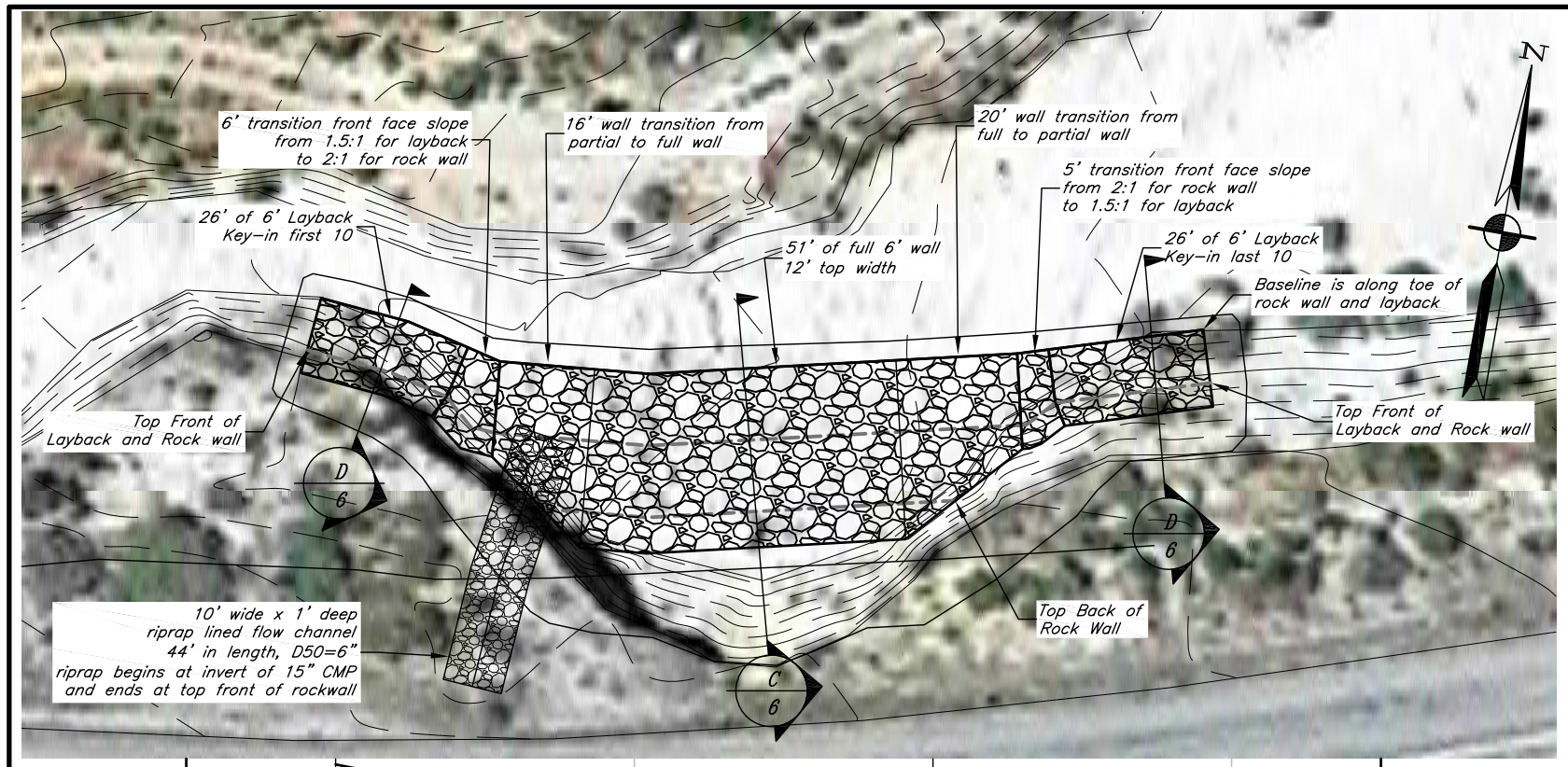

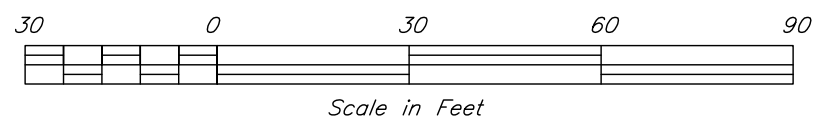

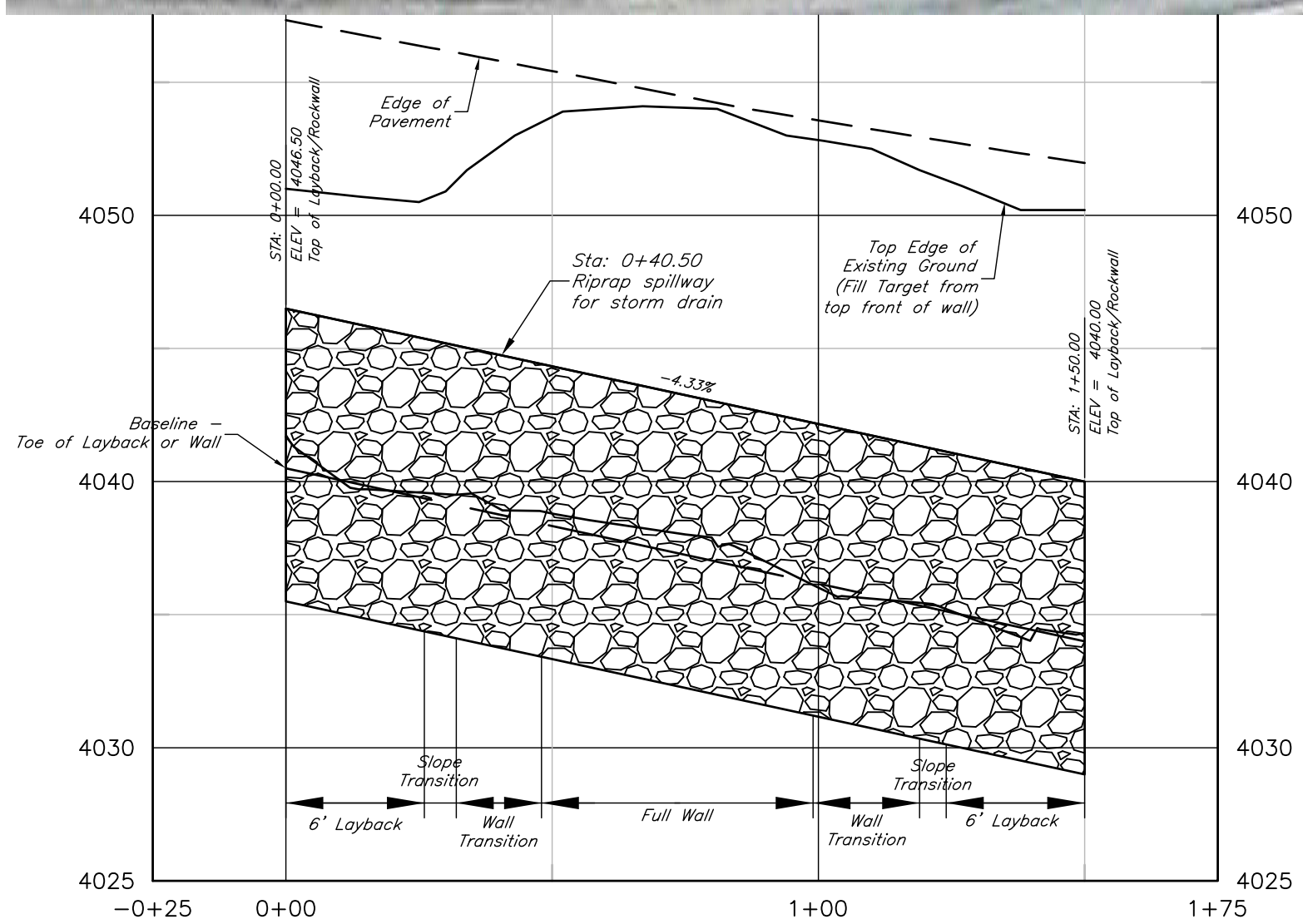

Rock Wall Baseline

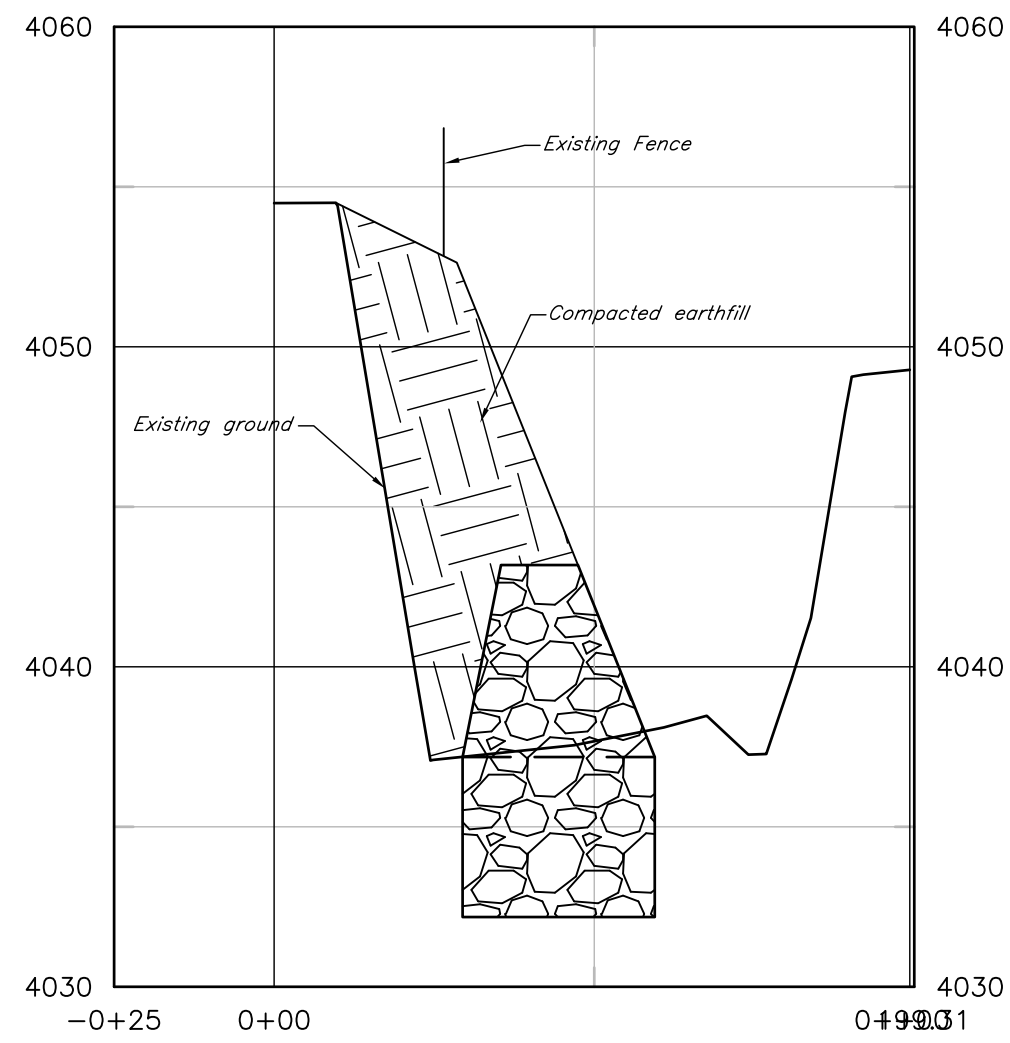

Rock Wall Cross Section

		Date
Designed	JDN	07/12
Drawn	JDN	08/12
Checked	SR	08/12
Approved	BS	08/12

Job Class V

US Highway 91–Shivwits EWP 2012

Site 3

Washington County, Utah

NRCS
Natural Resources Conservation Service
United States Department of Agriculture

File No. US91–Shivwits.dwg

August 29, 2012

Sheet 5 of 6

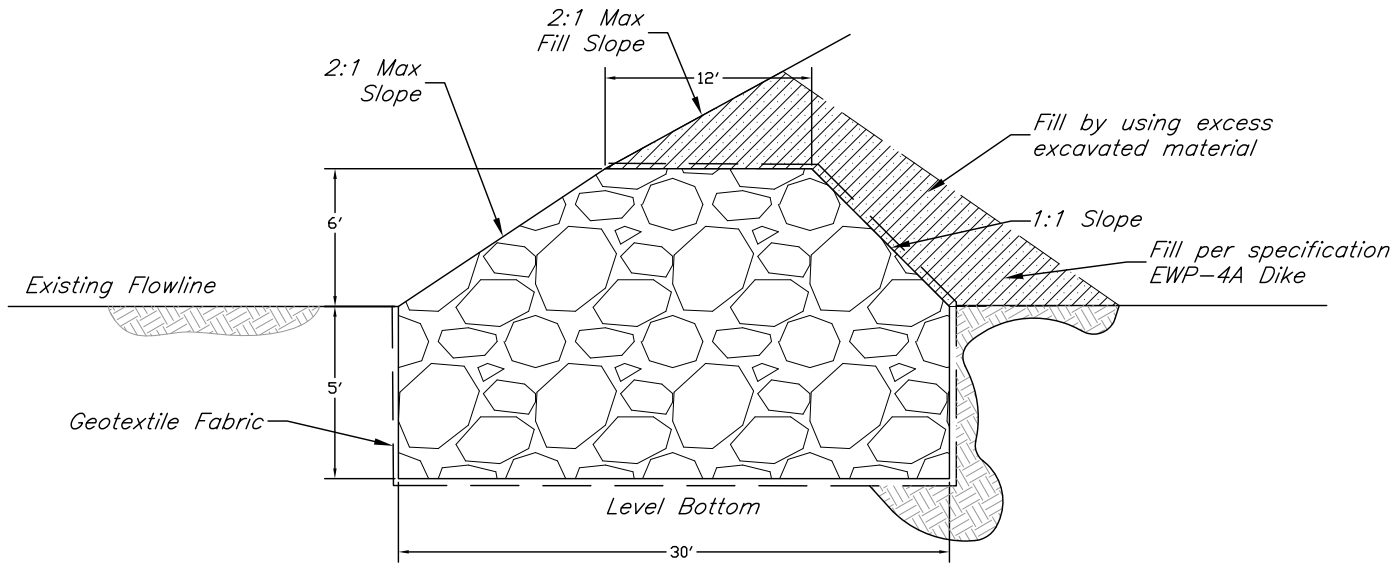

Geotextile Fabric – 61 ft as shown
Riprap – 10.2 cy/ft = 13.3 ton/ft

C Typical Rock Wall Section

N.T.S.

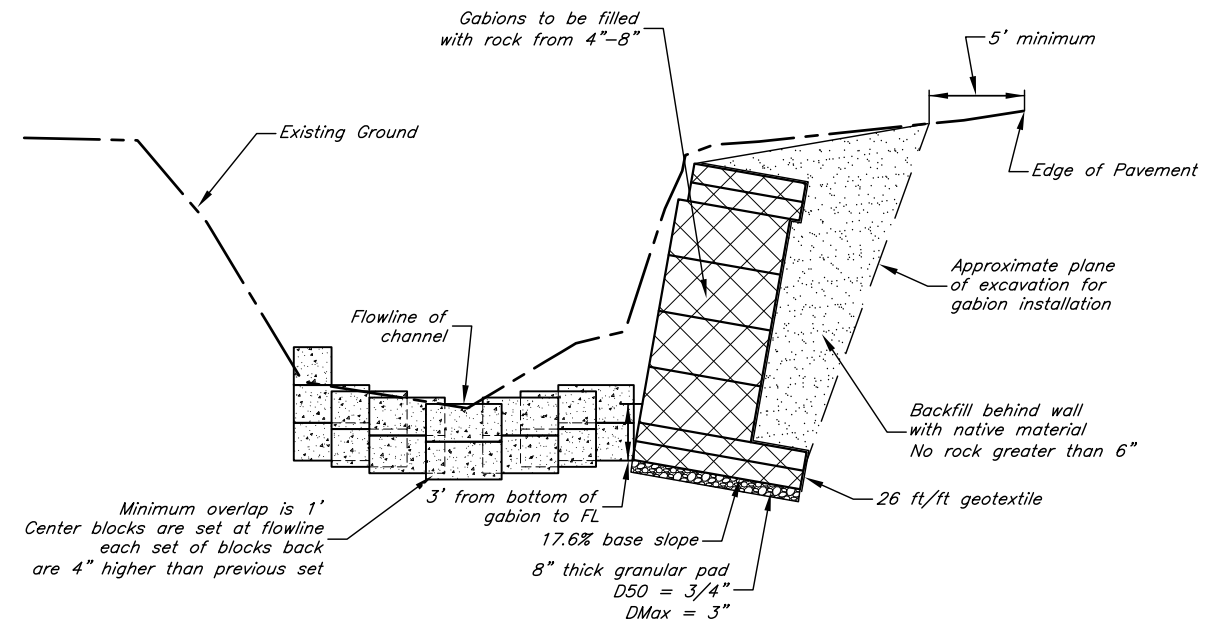

E Gabion Typical Cross Section

N.T.S.

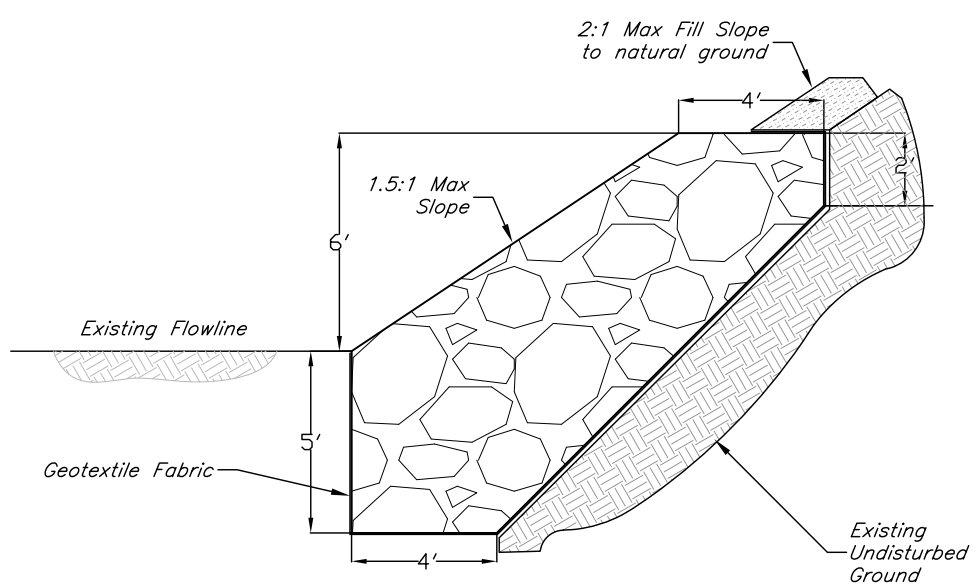

Geotextile Fabric – 26 ft as shown
Riprap – 2.5 cy/ft = 3.2 ton/ft

D 6' Layback Section

N.T.S.

Riprap Gradation

Size	Site 1 Grouted Sieve*	Site 1 Plunge Pool Sieve*	Site 3 Sieve*	% Passing**	% retained**
D100	18	36	42	100	0
D75	15	30	36	75	25
D50	12	24	30	50	25
D25	9	12	24	25	25
–	6	6	12	2	23
–	Fines	Fines	Fines	–	2

*square opening in inches

**By Weight

		Date
Designed	JDN	07/12
Drawn	JDN	08/12
Checked	SR	08/12
Approved	BS	08/12

US Highway 91–Shivwits EWP 2012
Details
Washington County
Washington County, Utah

Job Class V

NRCS
Natural Resources Conservation Service
United States Department of Agriculture

File No.
US91–Shivwits.dwg

August 29, 2012

Sheet 6 of 6